VSZ14

Cooling Capacity: 18,000 to 60,000 BTU/h
Heating Capacity: 18,000 to 60,000 BTU/h

Energy-Efficient Split System Heat Pump Up to 15 SEER & 9.0 HSPF



Contents

Nomenclature 2
Product Specifications 3
Expanded Cooling Data 4
Expanded Heating Data 20
Performance Data 22
AHRI Ratings 24
Dimensions 41
Wiring Diagram 42
Accessories 43

Standard Features

- High-efficiency compressor
- Time-delay technology to ensure quiet reliable defrost
- Single-speed condenser fan motor
- Factory-installed bi-flow liquid-line filter drier
- Factory-installed suction line accumulator
- Factory-installed compressor crankcase heater
- Factory-installed high-capacity muffler
- High- and low-pressure switches
- Copper tube/enhanced aluminum fin coil
- Service valves with sweat connections and easy access to gauge ports
- Fully charged for 15' of tubing length
- AHRI Certified; ETL Listed

Cabinet Features

- Heavy-gauge galvanized steel enclosure with sound-control top
- Attractive Powder-paint finish
- 500-hour salt-spray tested
- Steel louver coil guard
- Rust-resistant screws
- Top and side maintenance access
- Single-panel access to controls with space provided for field-installed accessories
- When properly anchored, meets the 2010 Florida Building Code unit integrity requirements for hurricane-type winds (Anchor bracket kits available.)

PARTS 5 YEAR LIMITED WARRANTY*

COMPANY WITH QUALITY SYSTEM CERTIFIED BY DNV GL = ISO 9001 =

COMPANY WITH ENVIRONMENTAL SYSTEM CERTIFIED BY DNV GL = ISO 14001 =

* Complete warranty details available from your local dealer or at www.goodmanmfg.com/gmc.

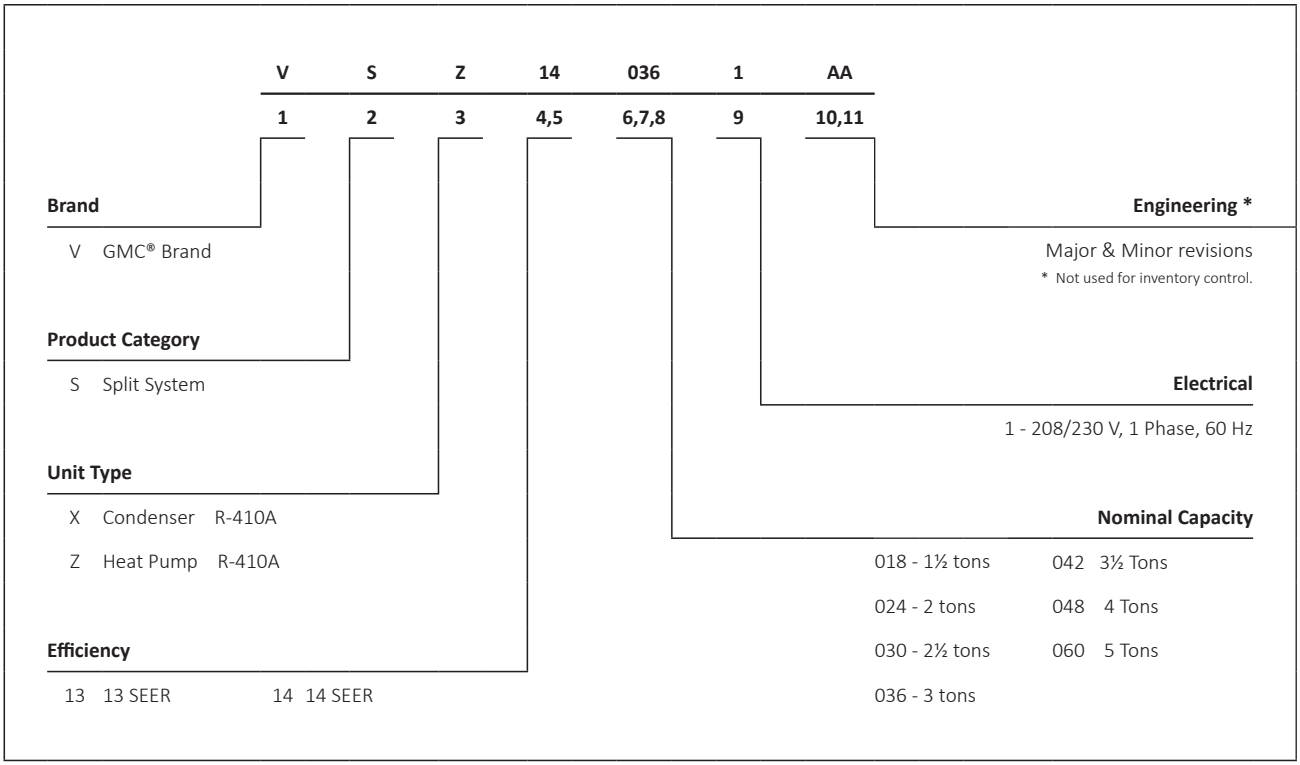
V S Z 14 036 1 AA
1 2 3 4,5 6,7,8 9 10,11
Brand
V GMC® Brand
Product Category
S Split System
Unit Type
X Condenser R-410A
Z Heat Pump R-410A
Efficiency
13 13 SEER
14 14 SEER
Engineering *
Major & Minor revisions
* Not used for inventory control.
Electrical
1 - 208/230 V, 1 Phase, 60 Hz
Nominal Capacity
018 - 1½ tons
024 - 2 tons
030 - 2½ tons
036 - 3 tons
042 3½ Tons
048 4 Tons
060 5 Tons

	VSZ14 0181B*	VSZ14 0241A*	VSZ14 0301A*	VSZ14 0361A*	VSZ14 0421A*	VSZ14 0481A*	VSZ14 0491A*	VSZ14 0601A*
NOMINAL CAPACITIES								
Cooling (BTU/h)	18,000	24,000	30,000	36,000	42,000	48,000	48,000	60,000
Heating (BTU/h)	18,000	24,000	30,000	36,000	42,000	48,000	48,000	60,000
Decibels	74	72	74	74	75	75	76	76
COMPRESSOR								
RLA	6.0	10.9	13.5	15.4	16.7	18.5	19.9	26.4
LRA	37.5	62.9	72.5	83.9	109.0	124.0	109.0	134.0
Type	Rotary	Scroll	Scroll	Scroll	Scroll	Scroll	Scroll	Scroll
CONDENSER FAN MOTOR								
Horsepower	1/6	1/6	1/6	1/6	1/6	1/4	1/4	1/4
FLA	0.95	0.95	0.95	0.95	1.1	1.3	1.5	1.3
REFRIGERATION SYSTEM								
Refrigerant Line Size[1]								
Liquid Line Size ("O.D.)	⅜"	⅜"	⅜"	⅜"	⅜"	⅜"	⅜"	⅜"
Suction Line Size ("O.D.)	¾"	¾"	¾"	⅞"	1⅛"	1⅛"	1⅛"	1⅛"
Refrigerant Connection Size								
Liquid Valve Size ("O.D.)	⅜"	⅜"	⅜"	⅜"	⅜"	⅜"	⅜"	⅜"
Suction Valve Size ("O.D.)	¾"	¾"	¾"	¾"	⅞"	¾"	⅞"	⅞"
Valve Connection Type	Sweat	Sweat	Sweat	Sweat	Sweat	Sweat	Sweat	Sweat
Refrigerant Charge	127	108	108	115	153	157	192	205
ELECTRICAL DATA								
Volts/Phase (60 Hz)	208-230/1	208-230/1	208-230/1	208-230/1	208-230/1	208-230/1	208-230/1	208-230/1
Minimum Circuit Ampacity [2]	8.5	14.6	17.8	20.2	22.0	24.4	26.4	34.3
Max. Overcurrent Protection [3]	15	25	30	35	35	40	45	60
Min / Max Volts	197 / 253	197 / 253	197 / 253	197 / 253	197 / 253	197 / 253	197 / 253	197 / 253
Electrical Conduit Size	½" or ¾"	½" or ¾"	½" or ¾"	½" or ¾"	½" or ¾"	½" or ¾"	½" or ¾"	½" or ¾"
UNIT WEIGHTS								
Equipment Weight (lbs)	143	143	171	173	191	226	273	277
Ship Weight (lbs)	154	154	182	184	207	237	288	292

[1] Tested and rated in accordance with ARI Standard 210/240

[2] Wire size should be determined in accordance with National Electrical Codes; extensive wire runs will require larger wire sizes

[3] Must use time-delay fuses or HACR-type circuit breakers of the same size as noted.

NOTES

- Always check the S&R plate for electrical data on the unit being installed.
- Installer will need to supply ⅞" to 1⅛" adapters for suction line connections.
- Unit is charged with refrigerant for 15' of ⅜" liquid line. System charge must be adjusted per Installation Instructions Final Charge Procedure.
- Installation of these units may require the specified TXV Kit to be installed on the indoor coil.
  THE SPECIFIED TXV IS DETERMINED BY THE OUTDOOR UNIT NOT THE INDOOR COIL.

			Outdoor Ambient Temperature																							
			65ºF				75ºF				85ºF				95ºF				105ºF				115ºF			
			Entering Indoor Wet Bulb Temperature																							
IDB	Airflow		59	63	67	71	59	63	67	71	59	63	67	71	59	63	67	71	59	63	67	71	59	63	67	71
70	525	MBh	17.9	18.1	18.7	-	17.7	18.0	18.5	-	17.3	17.5	18.0	-	16.4	16.7	17.2	-	15.5	15.7	16.3	-	14.6	14.8	15.4	-
		S/T	0.62	0.54	0.40	-	0.62	0.55	0.40	-	0.65	0.57	0.43	-	1.00	0.59	0.45	-	1.00	0.61	0.47	-	1.00	0.67	0.53	-
		ΔT	19	17	14	-	19	17	14	-	19	18	14	-	19	17	14	-	19	17	14	-	20	18	15	-
		kW	1.06	1.05	1.05	-	1.17	1.17	1.17	-	1.30	1.30	1.30	-	1.45	1.45	1.44	-	1.61	1.60	1.60	-	1.79	1.79	1.79	-
		Amps	4.0	4.0	4.0	-	4.5	4.5	4.5	-	5.1	5.1	5.1	-	5.8	5.8	5.8	-	6.5	6.5	6.5	-	7.4	7.4	7.4	-
		HI PR	244	245	247	-	283	284	286	-	323	325	326	-	367	368	370	-	414	415	417	-	464	465	467	-
		LO PR	125	126	129	-	132	134	137	-	139	141	144	-	145	146	149	-	150	152	155	-	157	159	162	-
	610	MBh	18.1	18.4	18.9	-	18.0	18.2	18.8	-	17.5	17.8	18.3	-	16.7	17.0	17.5	-	15.7	16.0	16.5	-	14.8	15.1	15.6	-
		S/T	0.69	0.61	0.47	-	0.69	0.62	0.48	-	0.72	0.64	0.50	-	1.00	0.66	0.52	-	1.00	0.69	0.54	-	1.00	0.74	0.60	-
		ΔT	18	16	13	-	18	16	13	-	18	16	13	-	18	16	13	-	18	16	13	-	19	17	14	-
		kW	1.06	1.06	1.06	-	1.18	1.18	1.18	-	1.31	1.31	1.31	-	1.45	1.45	1.45	-	1.61	1.61	1.61	-	1.80	1.80	1.80	-
		Amps	4.0	4.0	4.0	-	4.6	4.6	4.6	-	5.2	5.2	5.2	-	5.8	5.8	5.8	-	6.6	6.6	6.5	-	7.4	7.4	7.4	-
		HI PR	247	248	250	-	285	286	288	-	326	327	329	-	369	370	372	-	416	417	419	-	466	468	469	-
		LO PR	127	128	131	-	134	136	139	-	141	143	146	-	147	148	151	-	152	154	157	-	159	161	164	-
	675	MBh	18.4	18.6	19.2	-	18.2	18.5	19.0	-	17.8	18.0	18.5	-	16.9	17.2	17.7	-	16.0	16.2	16.8	-	15.1	15.3	15.9	-
		S/T	0.72	0.64	0.50	-	0.73	0.65	0.51	-	0.75	0.67	0.53	-	1.00	0.69	0.55	-	1.00	0.72	0.58	-	1.00	0.77	0.63	-
		ΔT	17	16	12	-	17	15	12	-	17	16	12	-	17	15	12	-	17	15	12	-	18	16	13	-
		kW	1.07	1.07	1.06	-	1.18	1.18	1.18	-	1.32	1.31	1.31	-	1.46	1.46	1.46	-	1.62	1.62	1.61	-	1.80	1.80	1.80	-
		Amps	4.1	4.1	4.0	-	4.6	4.6	4.6	-	5.2	5.2	5.2	-	5.8	5.8	5.8	-	6.6	6.6	6.6	-	7.4	7.4	7.4	-
		HI PR	248	250	251	-	287	288	290	-	328	329	330	-	371	372	374	-	418	419	421	-	468	469	471	-
		LO PR	128	130	133	-	136	138	141	-	143	144	147	-	148	150	153	-	154	155	159	-	161	162	166	-
75	525	MBh	17.9	18.1	18.7	19.5	17.7	18.0	18.5	19.3	17.3	17.5	18.1	18.9	16.5	**16.7**	17.2	18.1	15.5	15.7	16.3	17.1	14.6	14.8	15.4	16.2
		S/T	0.75	0.67	0.53	0.38	0.76	0.68	0.54	0.39	1.00	0.70	0.56	0.42	1.00	**0.72**	0.58	0.44	1.00	0.75	0.61	0.46	1.00	1.00	0.66	0.51
		ΔT	23	21	18	15	23	21	18	15	23	22	18	15	23	**21**	18	15	23	21	18	14	24	22	19	15
		kW	1.05	1.05	1.05	1.06	1.17	1.17	1.17	1.18	1.30	1.30	1.30	1.31	1.45	**1.45**	1.44	1.45	1.61	1.60	1.60	1.61	1.79	1.79	1.79	1.80
		Amps	4.0	4.0	4.0	4.0	4.5	4.5	4.5	4.6	5.1	5.1	5.1	5.2	5.8	**5.8**	5.8	5.8	6.5	6.5	6.5	6.5	7.4	7.4	7.4	7.4
		HI PR	245	246	247	252	283	284	286	290	324	325	326	331	367	**368**	370	374	414	415	417	421	464	465	467	471
		LO PR	125	126	129	135	132	134	137	142	139	141	144	149	145	**146**	149	155	150	152	155	160	157	159	162	167
	610	MBh	18.2	18.4	18.9	19.8	18.0	18.2	18.8	19.6	17.5	17.8	18.3	19.1	16.7	**17.0**	17.5	18.3	15.7	16.0	16.5	17.3	14.8	15.1	15.6	16.4
		S/T	0.82	0.74	0.60	0.46	1.00	0.75	0.61	0.46	1.00	0.78	0.64	0.49	1.00	**0.80**	0.66	0.51	1.00	0.82	0.68	0.53	1.00	1.00	0.73	0.58
		ΔT	22	20	17	13	22	20	17	13	22	20	17	14	22	**20**	17	13	22	20	17	13	23	21	18	14
		kW	1.06	1.06	1.06	1.07	1.18	1.18	1.18	1.19	1.31	1.31	1.31	1.32	1.45	**1.45**	1.45	1.46	1.61	1.61	1.61	1.62	1.80	1.80	1.80	1.80
		Amps	4.0	4.0	4.0	4.1	4.6	4.6	4.6	4.6	5.2	5.2	5.2	5.2	5.8	**5.8**	5.8	5.9	6.6	6.5	6.5	6.6	7.4	7.4	7.4	7.4
		HI PR	247	248	250	254	286	287	288	293	326	327	329	333	370	**371**	372	377	417	418	419	424	467	468	469	474
		LO PR	127	128	132	137	134	136	139	144	141	143	146	151	147	**148**	151	157	152	154	157	162	159	161	164	169
	675	MBh	18.4	18.6	19.2	20.0	18.2	18.5	19.0	19.8	17.8	18.0	18.5	19.4	17.0	**17.2**	17.7	18.6	16.0	16.2	16.8	17.6	15.1	15.3	15.9	16.7
		S/T	0.85	0.77	0.63	0.49	1.00	0.78	0.64	0.49	1.00	0.81	0.67	0.52	1.00	**0.83**	0.69	0.54	1.00	1.00	0.71	0.56	1.00	1.00	0.76	0.62
		ΔT	21	19	16	13	21	19	16	13	21	20	16	13	21	**19**	16	13	21	19	16	12	22	20	17	13
		kW	1.07	1.06	1.06	1.07	1.18	1.18	1.18	1.19	1.32	1.31	1.31	1.32	1.46	**1.46**	1.45	1.46	1.62	1.62	1.61	1.62	1.80	1.80	1.80	1.81
		Amps	4.1	4.0	4.0	4.1	4.6	4.6	4.6	4.6	5.2	5.2	5.2	5.2	5.8	**5.8**	5.8	5.9	6.6	6.6	6.6	6.6	7.4	7.4	7.4	7.5
		HI PR	249	250	251	256	287	288	290	294	328	329	331	335	371	**372**	374	378	418	419	421	425	468	469	471	475
		LO PR	129	130	133	139	136	138	141	146	143	144	147	153	148	**150**	153	158	154	155	159	164	161	162	166	171

IDB: Entering Indoor Dry Bulb Temperature

Shaded area reflects ACCA (TVA) Rating Conditions.

kW = Total system power

High and low pressures are measured at the liquid and suction service valves.

Amps = Outdoor unit amps (compressor + fan)

			Outdoor Ambient Temperature																							
			65ºF				75ºF				85ºF				95ºF				105ºF				115ºF			
			Entering Indoor Wet Bulb Temperature																							
IDB	Airflow		59	63	67	71	59	63	67	71	59	63	67	71	59	63	67	71	59	63	67	71	59	63	67	71
80	525	MBh	18.0	18.2	18.8	19.6	17.8	18.1	18.6	19.4	17.4	17.6	18.1	19.0	16.6	16.8	17.3	18.2	15.6	15.8	16.4	17.2	14.7	14.9	15.5	16.3
		S/T	1.00	0.80	0.66	0.51	1.00	0.81	0.67	0.52	1.00	0.83	0.69	0.55	1.00	1.00	0.71	0.57	1.00	1.00	0.74	0.59	1.00	1.00	0.79	0.64
		ΔT	27	25	22	19	27	25	22	19	27	25	22	19	27	25	22	19	27	25	22	18	28	26	23	19
		kW	1.06	1.05	1.05	1.06	1.17	1.17	1.17	1.18	1.30	1.30	1.30	1.31	1.45	1.45	1.44	1.45	1.61	1.60	1.60	1.61	1.79	1.79	1.79	1.80
		Amps	4.0	4.0	4.0	4.0	4.5	4.5	4.5	4.6	5.1	5.1	5.1	5.2	5.8	5.8	5.8	5.8	6.5	6.5	6.5	6.6	7.4	7.4	7.4	7.4
		HI PR	245	246	248	252	284	285	286	291	324	325	327	331	368	369	370	375	415	416	417	422	465	466	468	472
		LO PR	125	127	130	135	133	134	138	143	140	141	144	150	145	147	150	155	151	152	155	161	158	159	162	168
	610	MBh	18.2	18.5	19.0	19.8	18.1	18.3	18.9	19.7	17.6	17.9	18.4	19.2	16.8	17.1	**17.6**	18.4	15.8	16.1	16.6	17.4	14.9	15.2	15.7	16.5
		S/T	1.00	0.87	0.73	0.59	1.00	0.88	0.74	0.59	1.00	0.91	0.77	0.62	1.00	1.00	**0.79**	0.64	1.00	1.00	0.81	0.66	1.00	1.00	0.86	0.71
		ΔT	26	24	21	17	26	24	21	17	26	24	21	18	26	24	**21**	17	26	24	20	17	27	25	22	18
		kW	1.06	1.06	1.06	1.07	1.18	1.18	1.18	1.19	1.31	1.31	1.31	1.32	1.45	1.45	**1.45**	1.46	1.61	1.61	1.61	1.62	1.80	1.80	1.80	1.81
		Amps	4.0	4.0	4.0	4.1	4.6	4.6	4.6	4.6	5.2	5.2	5.2	5.2	5.8	5.8	**5.8**	5.9	6.6	6.6	6.5	6.6	7.4	7.4	7.4	7.4
		HI PR	247	248	250	254	286	287	289	293	326	328	329	334	370	371	**373**	377	417	418	420	424	467	468	470	474
		LO PR	127	129	132	137	135	136	140	145	142	143	146	152	147	149	**152**	157	153	154	157	163	160	161	164	170
	675	MBh	18.5	18.7	19.3	20.1	18.3	18.6	19.1	19.9	17.9	18.1	18.6	19.5	17.0	17.3	17.8	18.7	16.1	16.3	16.9	17.7	15.2	15.4	16.0	16.8
		S/T	1.00	0.90	0.76	0.62	1.00	0.91	0.77	0.62	1.00	0.94	0.80	0.65	1.00	1.00	0.82	0.67	1.00	1.00	0.84	0.69	1.00	1.00	0.89	0.74
		ΔT	25	23	20	17	25	23	20	17	25	24	20	17	25	23	20	17	25	23	20	16	26	24	21	17
		kW	1.07	1.07	1.06	1.07	1.18	1.18	1.18	1.19	1.32	1.31	1.31	1.32	1.46	1.46	1.46	1.46	1.62	1.62	1.61	1.62	1.80	1.80	1.80	1.81
		Amps	4.1	4.1	4.0	4.1	4.6	4.6	4.6	4.6	5.2	5.2	5.2	5.2	5.8	5.8	5.8	5.9	6.6	6.6	6.6	6.6	7.4	7.4	7.4	7.5
		HI PR	249	250	252	256	288	289	291	295	328	329	331	335	372	373	375	379	419	420	422	426	469	470	472	476
		LO PR	129	131	134	139	137	138	141	147	143	145	148	153	149	150	154	159	154	156	159	165	161	163	166	171
85	525	MBh	18.3	18.5	19.1	19.9	18.1	18.4	18.9	19.7	17.7	17.9	18.4	19.3	16.9	17.1	17.6	18.5	15.9	16.1	16.7	17.5	15.0	15.2	15.8	16.6
		S/T	1.00	0.91	0.77	0.62	1.00	1.00	0.77	0.63	1.00	1.00	0.80	0.65	1.00	1.00	0.82	0.67	1.00	1.00	0.84	0.69	1.00	1.00	1.00	0.75
		ΔT	31	29	25	22	30	29	25	22	31	29	26	22	30	29	25	22	30	28	25	22	31	30	26	23
		kW	1.06	1.06	1.05	1.06	1.18	1.17	1.17	1.18	1.31	1.31	1.30	1.31	1.45	1.45	1.45	1.45	1.61	1.61	1.60	1.61	1.79	1.79	1.79	1.80
		Amps	4.0	4.0	4.0	4.0	4.6	4.6	4.5	4.6	5.2	5.2	5.1	5.2	5.8	5.8	5.8	5.8	6.5	6.5	6.5	6.6	7.4	7.4	7.4	7.4
		HI PR	246	247	249	253	285	286	288	292	325	326	328	332	369	370	372	376	416	417	419	423	466	467	469	473
		LO PR	127	129	132	137	135	136	140	145	141	143	146	151	147	149	152	157	153	154	157	163	160	161	164	170
	610	MBh	18.5	18.8	19.3	20.2	18.4	18.6	19.2	20.0	17.9	18.2	18.7	19.5	17.1	17.4	17.9	18.7	16.1	16.4	16.9	17.7	15.2	15.5	16.0	16.8
		S/T	1.00	0.98	0.84	0.69	1.00	1.00	0.84	0.70	1.00	1.00	0.87	0.72	1.00	1.00	0.89	0.74	1.00	1.00	1.00	0.77	1.00	1.00	1.00	0.82
		ΔT	29	28	24	21	29	28	24	21	30	28	24	21	29	27	24	21	29	27	24	21	30	28	25	22
		kW	1.06	1.06	1.06	1.07	1.18	1.18	1.18	1.19	1.31	1.31	1.31	1.32	1.46	1.45	1.45	1.46	1.61	1.61	1.61	1.62	1.80	1.80	1.80	1.81
		Amps	4.0	4.0	4.0	4.1	4.6	4.6	4.6	4.6	5.2	5.2	5.2	5.2	5.8	5.8	5.8	5.9	6.6	6.6	6.6	6.6	7.4	7.4	7.4	7.4
		HI PR	249	250	251	256	287	288	290	294	328	329	330	335	371	372	374	378	418	419	421	425	468	469	471	475
		LO PR	129	131	134	139	137	138	142	147	143	145	148	154	149	151	154	159	155	156	159	165	162	163	166	172
	675	MBh	18.8	19.0	19.6	20.4	18.6	18.9	19.4	20.2	18.2	18.4	18.9	19.8	17.4	17.6	18.1	19.0	16.4	16.6	17.2	18.0	15.5	15.7	16.3	17.1
		S/T	1.00	1.00	0.87	0.72	1.00	1.00	0.88	0.73	1.00	1.00	0.90	0.75	1.00	1.00	0.92	0.77	1.00	1.00	1.00	0.80	1.00	1.00	1.00	0.85
		ΔT	29	27	23	20	29	27	23	20	29	27	24	20	28	27	23	20	28	26	23	20	29	28	24	21
		kW	1.07	1.07	1.07	1.07	1.19	1.19	1.18	1.19	1.32	1.32	1.32	1.32	1.46	1.46	1.46	1.47	1.62	1.62	1.62	1.63	1.81	1.80	1.80	1.81
		Amps	4.1	4.1	4.1	4.1	4.6	4.6	4.6	4.6	5.2	5.2	5.2	5.2	5.9	5.9	5.8	5.9	6.6	6.6	6.6	6.6	7.4	7.4	7.4	7.5
		HI PR	250	251	253	257	289	290	292	296	329	330	332	336	373	374	376	380	420	421	423	427	470	471	473	477
		LO PR	131	132	136	141	139	140	143	149	145	147	150	155	151	152	156	161	156	158	161	166	163	165	168	173

IDB: Entering Indoor Dry Bulb Temperature

Shaded area reflects AHRI Rating Conditions.

kW = Total system power

High and low pressures are measured at the liquid and suction service valves.

Amps = Outdoor unit amps (compressor + fan)

			Outdoor Ambient Temperature																							
			65ºF				75ºF				85ºF				95ºF				105ºF				115ºF			
			Entering Indoor Wet Bulb Temperature																							
IDB	Airflow		59	63	67	71	59	63	67	71	59	63	67	71	59	63	67	71	59	63	67	71	59	63	67	71
70	700	MBh	23.7	24.0	24.7	-	23.4	23.8	24.5	-	22.8	23.2	23.9	-	21.7	22.1	22.8	-	20.4	20.8	21.5	-	19.2	19.6	20.3	-
		S/T	0.59	0.51	0.37	-	0.60	0.52	0.37	-	0.62	0.54	0.40	-	0.65	0.56	0.42	-	1.00	0.59	0.44	-	1.00	0.64	0.50	-
		ΔT	19	17	14	-	19	17	14	-	19	17	14	-	19	17	14	-	19	17	14	-	20	18	15	-
		kW	1.41	1.40	1.40	-	1.57	1.57	1.57	-	1.76	1.76	1.75	-	1.96	1.96	1.95	-	2.18	2.18	2.18	-	2.44	2.44	2.44	-
		Amps	5.2	5.2	5.2	-	6.0	5.9	5.9	-	6.8	6.8	6.8	-	7.7	7.7	7.7	-	8.7	8.7	8.7	-	9.9	9.9	9.9	-
		HI PR	249	250	252	-	288	290	291	-	330	331	333	-	374	375	377	-	422	423	425	-	474	475	476	-
		LO PR	123	124	128	-	130	132	135	-	137	139	142	-	143	144	147	-	148	150	153	-	155	157	160	-
	800	MBh	23.9	24.2	25.0	-	23.7	24.0	24.7	-	23.1	23.4	24.1	-	22.0	22.3	23.1	-	20.7	21.0	21.7	-	19.5	19.8	20.6	-
		S/T	0.67	0.59	0.44	-	0.67	0.59	0.45	-	0.70	0.62	0.48	-	1.00	0.64	0.50	-	1.00	0.66	0.52	-	1.00	0.72	0.58	-
		ΔT	18	16	13	-	18	16	13	-	18	16	13	-	18	16	13	-	18	16	13	-	19	17	14	-
		kW	1.41	1.41	1.41	-	1.58	1.58	1.58	-	1.77	1.76	1.76	-	1.97	1.96	1.96	-	2.19	2.19	2.19	-	2.45	2.45	2.45	-
		Amps	5.2	5.2	5.2	-	6.0	6.0	6.0	-	6.8	6.8	6.8	-	7.8	7.8	7.7	-	8.8	8.8	8.8	-	10.0	10.0	10.0	-
		HI PR	251	252	254	-	290	292	293	-	332	333	335	-	376	377	379	-	424	426	427	-	476	477	479	-
		LO PR	125	126	129	-	132	134	137	-	139	140	143	-	144	146	149	-	150	151	154	-	157	158	161	-
	870	MBh	24.1	24.5	25.2	-	23.9	24.2	25.0	-	23.3	23.6	24.3	-	22.2	22.6	23.3	-	20.9	21.2	22.0	-	19.7	20.1	20.8	-
		S/T	0.71	0.62	0.48	-	0.71	0.63	0.49	-	0.74	0.66	0.51	-	1.00	0.68	0.53	-	1.00	0.70	0.56	-	1.00	0.76	0.61	-
		ΔT	17	16	12	-	17	15	12	-	17	16	13	-	17	15	12	-	17	15	12	-	18	16	13	-
		kW	1.42	1.42	1.42	-	1.59	1.58	1.58	-	1.77	1.77	1.77	-	1.97	1.97	1.97	-	2.20	2.19	2.19	-	2.46	2.46	2.45	-
		Amps	5.3	5.3	5.2	-	6.0	6.0	6.0	-	6.9	6.9	6.8	-	7.8	7.8	7.8	-	8.8	8.8	8.8	-	10.0	10.0	10.0	-
		HI PR	252	253	255	-	292	293	295	-	333	334	336	-	378	379	381	-	426	427	429	-	477	478	480	-
		LO PR	126	127	130	-	133	135	138	-	140	141	145	-	145	147	150	-	151	152	156	-	158	159	163	-
75	700	MBh	23.7	24.0	24.7	25.8	23.5	23.8	24.5	25.6	22.8	23.2	23.9	25.0	21.8	**22.1**	22.8	23.9	20.5	20.8	21.5	22.6	19.3	19.6	20.3	21.4
		S/T	0.73	0.65	0.50	0.35	0.73	0.65	0.51	0.36	1.00	0.68	0.54	0.39	1.00	**0.70**	0.56	0.41	1.00	0.72	0.58	0.43	1.00	1.00	0.64	0.48
		ΔT	23	21	18	15	23	21	18	14	23	21	18	15	23	**21**	18	14	22	21	17	14	23	22	19	15
		kW	1.40	1.40	1.40	1.41	1.57	1.57	1.57	1.58	1.76	1.75	1.75	1.76	1.96	**1.95**	1.95	1.96	2.18	2.18	2.18	2.19	2.44	2.44	2.44	2.45
		Amps	5.2	5.2	5.2	5.2	5.9	5.9	5.9	6.0	6.8	6.8	6.8	6.8	7.7	**7.7**	7.7	7.8	8.7	8.7	8.7	8.8	9.9	9.9	9.9	10.0
		HI PR	249	250	252	256	289	290	291	296	330	331	333	337	375	**376**	377	382	423	424	425	430	474	475	477	481
		LO PR	123	125	128	133	131	132	135	140	137	139	142	147	143	**144**	147	153	148	150	153	158	155	157	160	165
	800	MBh	23.9	24.3	25.0	26.1	23.7	24.0	24.8	25.8	23.1	23.4	24.1	25.2	22.0	**22.4**	23.1	24.2	20.7	21.1	21.8	22.8	19.5	19.9	20.6	21.7
		S/T	0.80	0.72	0.58	0.43	0.81	0.73	0.59	0.44	1.00	0.76	0.61	0.46	1.00	**0.78**	0.63	0.48	1.00	0.80	0.66	0.51	1.00	1.00	0.71	0.56
		ΔT	22	20	17	13	21	20	17	13	22	20	17	14	21	**20**	17	13	21	20	16	13	22	21	17	14
		kW	1.41	1.41	1.41	1.42	1.58	1.58	1.58	1.59	1.76	1.76	1.76	1.77	1.96	**1.96**	1.96	1.97	2.19	2.19	2.18	2.20	2.45	2.45	2.45	2.46
		Amps	5.2	5.2	5.2	5.3	6.0	6.0	6.0	6.0	6.8	6.8	6.8	6.9	7.8	**7.7**	7.7	7.8	8.8	8.8	8.8	8.8	10.0	10.0	10.0	10.0
		HI PR	251	252	254	258	291	292	294	298	332	333	335	339	377	**378**	379	384	425	426	427	432	476	477	479	483
		LO PR	125	126	129	135	132	134	137	142	139	140	143	149	144	**146**	149	154	150	151	154	160	157	158	161	167
	870	MBh	24.1	24.5	25.2	26.3	23.9	24.3	25.0	26.1	23.3	23.6	24.3	25.4	22.2	**22.6**	23.3	24.4	20.9	21.3	22.0	23.1	19.7	20.1	20.8	21.9
		S/T	0.84	0.76	0.62	0.47	1.00	0.77	0.62	0.47	1.00	0.79	0.65	0.50	1.00	**0.82**	0.67	0.52	1.00	0.84	0.69	0.54	1.00	1.00	0.75	0.60
		ΔT	21	19	16	13	21	19	16	13	21	19	16	13	21	**19**	16	13	21	19	16	13	22	20	17	14
		kW	1.42	1.42	1.41	1.43	1.58	1.58	1.58	1.59	1.77	1.77	1.77	1.78	1.97	**1.97**	1.97	1.98	2.19	2.19	2.19	2.20	2.46	2.46	2.45	2.47
		Amps	5.3	5.2	5.2	5.3	6.0	6.0	6.0	6.1	6.9	6.9	6.8	6.9	7.8	**7.8**	7.8	7.8	8.8	8.8	8.8	8.8	10.0	10.0	10.0	10.0
		HI PR	253	254	255	260	292	293	295	299	333	335	336	341	378	**379**	381	385	426	427	429	433	477	478	480	484
		LO PR	126	127	130	136	133	135	138	143	140	141	145	150	146	**147**	150	155	151	153	156	161	158	159	163	168

IDB: Entering Indoor Dry Bulb Temperature

Shaded area reflects ACCA (TVA) Rating Conditions.

kW = Total system power

High and low pressures are measured at the liquid and suction service valves.

Amps = Outdoor unit amps (compressor + fan)

			OUTDOOR AMBIENT TEMPERATURE																							
			65ºF				75ºF				85ºF				95ºF				105ºF				115ºF			
			ENTERING INDOOR WET BULB TEMPERATURE																							
IDB	AIRFLOW		59	63	67	71	59	63	67	71	59	63	67	71	59	63	67	71	59	63	67	71	59	63	67	71
80	700	MBh	23.8	24.1	24.8	25.9	23.6	23.9	24.6	25.7	23.0	23.3	24.0	25.1	21.9	22.2	22.9	24.0	20.6	20.9	21.6	22.7	19.4	19.7	20.4	21.5
		S/T	1.00	0.78	0.64	0.49	1.00	0.79	0.64	0.49	1.00	0.81	0.67	0.52	1.00	0.83	0.69	0.54	1.00	1.00	0.71	0.56	1.00	1.00	0.77	0.62
		ΔT	26	25	22	18	26	25	21	18	27	25	22	18	26	25	21	18	26	24	21	18	27	25	22	19
		kW	1.41	1.40	1.40	1.41	1.57	1.57	1.57	1.58	1.76	1.76	1.75	1.76	1.96	1.96	1.95	1.97	2.18	2.18	2.18	2.19	2.44	2.44	2.44	2.45
		Amps	5.2	5.2	5.2	5.2	6.0	5.9	5.9	6.0	6.8	6.8	6.8	6.8	7.7	7.7	7.7	7.8	8.7	8.7	8.7	8.8	9.9	9.9	9.9	10.0
		HI PR	250	251	252	257	289	290	292	296	330	332	333	338	375	376	378	382	423	424	426	430	474	475	477	482
		LO PR	124	125	128	133	131	133	136	141	138	139	142	148	143	145	148	153	149	150	153	159	156	157	160	166
	800	MBh	24.0	24.4	25.1	26.2	23.8	24.2	24.9	26.0	23.2	23.6	24.3	25.3	22.1	22.5	23.2	24.3	20.8	21.2	21.9	23.0	19.6	20.0	20.7	21.8
		S/T	1.00	0.86	0.71	0.56	1.00	0.86	0.72	0.57	1.00	0.89	0.75	0.59	1.00	1.00	0.77	0.62	1.00	1.00	0.79	0.64	1.00	1.00	0.84	0.69
		ΔT	25	24	20	17	25	24	20	17	25	24	21	17	25	24	20	17	25	23	20	17	26	24	21	18
		kW	1.41	1.41	1.41	1.42	1.58	1.58	1.58	1.59	1.77	1.76	1.76	1.77	1.97	1.96	1.96	1.97	2.19	2.19	2.19	2.20	2.45	2.45	2.45	2.46
		Amps	5.2	5.2	5.2	5.3	6.0	6.0	6.0	6.0	6.8	6.8	6.8	6.9	7.8	7.8	7.7	7.8	8.8	8.8	8.8	8.8	10.0	10.0	10.0	10.0
		HI PR	252	253	255	259	291	292	294	298	333	334	335	340	377	378	380	384	425	426	428	432	476	477	479	484
		LO PR	125	127	130	135	133	134	137	143	139	141	144	149	145	146	150	155	150	152	155	160	157	159	162	167
	870	MBh	24.3	24.6	25.3	26.4	24.0	24.4	25.1	26.2	23.4	23.8	24.5	25.6	22.4	22.7	**23.4**	24.5	21.0	21.4	22.1	23.2	19.9	20.2	20.9	22.0
		S/T	1.00	0.89	0.75	0.60	1.00	0.90	0.76	0.61	1.00	0.93	0.78	0.63	1.00	1.00	**0.80**	0.65	1.00	1.00	0.83	0.68	1.00	1.00	0.88	0.73
		ΔT	25	23	20	17	25	23	20	17	25	23	20	17	25	23	**20**	16	24	23	20	16	25	24	21	17
		kW	1.42	1.42	1.42	1.43	1.59	1.58	1.58	1.59	1.77	1.77	1.77	1.78	1.97	1.97	**1.97**	1.98	2.19	2.19	2.19	2.20	2.46	2.46	2.45	2.47
		Amps	5.3	5.3	5.2	5.3	6.0	6.0	6.0	6.1	6.9	6.9	6.8	6.9	7.8	7.8	**7.8**	7.8	8.8	8.8	8.8	8.8	10.0	10.0	10.0	10.0
		HI PR	253	254	256	260	293	294	295	300	334	335	337	341	378	380	**381**	386	426	428	429	434	478	479	481	485
		LO PR	126	128	131	136	134	135	139	144	140	142	145	150	146	148	**151**	156	152	153	156	161	158	160	163	168
85	700	MBh	24.2	24.5	25.2	26.3	24.0	24.3	25.0	26.1	23.4	23.7	24.4	25.5	22.3	22.6	23.3	24.4	21.0	21.3	22.0	23.1	19.8	20.1	20.8	21.9
		S/T	1.00	0.89	0.74	0.59	1.00	0.89	0.75	0.60	1.00	1.00	0.78	0.63	1.00	1.00	0.80	0.65	1.00	1.00	0.82	0.67	1.00	1.00	1.00	0.72
		ΔT	30	28	25	22	30	28	25	22	30	28	25	22	30	28	25	21	29	28	25	21	30	29	26	22
		kW	1.41	1.41	1.40	1.42	1.57	1.57	1.57	1.58	1.76	1.76	1.76	1.77	1.96	1.96	1.96	1.97	2.18	2.18	2.18	2.19	2.45	2.45	2.44	2.45
		Amps	5.2	5.2	5.2	5.2	6.0	6.0	5.9	6.0	6.8	6.8	6.8	6.9	7.7	7.7	7.7	7.8	8.8	8.7	8.7	8.8	10.0	10.0	9.9	10.0
		HI PR	251	252	254	258	290	291	293	297	332	333	334	339	376	377	379	383	424	425	427	431	475	477	478	483
		LO PR	125	127	130	135	133	134	138	143	140	141	144	149	145	147	150	155	151	152	155	161	157	159	162	167
	800	MBh	24.5	24.8	25.5	26.6	24.2	24.6	25.3	26.4	23.6	24.0	24.7	25.7	22.5	22.9	23.6	24.7	21.2	21.6	22.3	23.4	20.0	20.4	21.1	22.2
		S/T	1.00	0.96	0.82	0.67	1.00	1.00	0.83	0.68	1.00	1.00	0.85	0.70	1.00	1.00	0.87	0.72	1.00	1.00	0.90	0.75	1.00	1.00	1.00	0.80
		ΔT	29	27	24	20	29	27	24	20	29	27	24	21	29	27	24	20	28	27	23	20	29	28	25	21
		kW	1.42	1.42	1.41	1.43	1.58	1.58	1.58	1.59	1.77	1.77	1.76	1.78	1.97	1.97	1.96	1.98	2.19	2.19	2.19	2.20	2.46	2.45	2.45	2.46
		Amps	5.2	5.2	5.2	5.3	6.0	6.0	6.0	6.0	6.9	6.8	6.8	6.9	7.8	7.8	7.8	7.8	8.8	8.8	8.8	8.8	10.0	10.0	10.0	10.0
		HI PR	253	254	256	260	292	293	295	300	334	335	337	341	378	379	381	385	426	427	429	433	478	479	480	485
		LO PR	127	129	132	137	135	136	139	144	141	143	146	151	147	148	151	157	152	154	157	162	159	161	164	169
	870	MBh	24.7	25.0	25.7	26.8	24.4	24.8	25.5	26.6	23.8	24.2	24.9	26.0	22.8	23.1	23.8	24.9	21.4	21.8	22.5	23.6	20.3	20.6	21.3	22.4
		S/T	1.00	1.00	0.86	0.71	1.00	1.00	0.86	0.71	1.00	1.00	0.89	0.74	1.00	1.00	0.91	0.76	1.00	1.00	0.93	0.78	1.00	1.00	1.00	0.84
		ΔT	28	26	23	20	28	26	23	20	28	26	23	20	28	26	23	20	28	26	23	20	29	27	24	21
		kW	1.42	1.42	1.42	1.43	1.59	1.59	1.58	1.60	1.77	1.77	1.77	1.78	1.97	1.97	1.97	1.98	2.20	2.20	2.19	2.21	2.46	2.46	2.46	2.47
		Amps	5.3	5.3	5.3	5.3	6.0	6.0	6.0	6.1	6.9	6.9	6.9	6.9	7.8	7.8	7.8	7.8	8.8	8.8	8.8	8.9	10.0	10.0	10.0	10.1
		HI PR	254	255	257	261	294	295	297	301	335	336	338	342	380	381	382	387	428	429	430	435	479	480	482	486
		LO PR	128	130	133	138	136	137	140	146	142	144	147	152	148	149	153	158	153	155	158	163	160	162	165	170

IDB: Entering Indoor Dry Bulb Temperature

Shaded area reflects AHRI Rating Conditions.

kW = Total system power

High and low pressures are measured at the liquid and suction service valves.

Amps = Outdoor unit amps (compressor + fan)

			OUTDOOR AMBIENT TEMPERATURE																							
			65ºF				75ºF				85ºF				95ºF				105ºF				115ºF			
			ENTERING INDOOR WET BULB TEMPERATURE																							
IDB	AIRFLOW		59	63	67	71	59	63	67	71	59	63	67	71	59	63	67	71	59	63	67	71	59	63	67	71
70	870	MBh	28.4	28.8	29.7	-	28.2	28.6	29.4	-	27.5	27.9	28.7	-	26.2	26.6	27.4	-	24.7	25.1	25.9	-	23.3	23.6	24.5	-
		S/T	0.65	0.57	0.44	-	0.66	0.58	0.45	-	0.68	0.61	0.47	-	0.70	0.62	0.49	-	0.72	0.65	0.51	-	1.00	0.70	0.56	-
		ΔT	19	17	13	-	19	17	13	-	19	17	14	-	19	17	13	-	18	17	13	-	20	18	14	-
		kW	1.69	1.69	1.68	-	1.89	1.89	1.89	-	2.12	2.11	2.11	-	2.36	2.36	2.35	-	2.63	2.63	2.63	-	2.95	2.95	2.95	-
		Amps	6.5	6.5	6.5	-	7.5	7.5	7.4	-	8.5	8.5	8.5	-	9.6	9.6	9.6	-	10.9	10.9	10.8	-	12.3	12.3	12.3	-
		HI PR	250	251	253	-	289	290	292	-	330	331	333	-	374	375	377	-	422	423	425	-	473	474	475	-
		LO PR	118	120	123	-	125	127	130	-	131	133	136	-	137	138	141	-	142	143	146	-	148	150	153	-
	1000	MBh	29.0	29.4	30.2	-	28.7	29.1	30.0	-	28.0	28.4	29.2	-	26.7	27.1	28.0	-	25.2	25.6	26.4	-	23.8	24.2	25.0	-
		S/T	0.69	0.61	0.48	-	0.69	0.62	0.49	-	0.72	0.64	0.51	-	0.74	0.66	0.53	-	1.00	0.68	0.55	-	1.00	0.73	0.60	-
		ΔT	18	16	12	-	18	16	12	-	18	16	13	-	18	16	12	-	17	15	12	-	18	17	13	-
		kW	1.70	1.70	1.69	-	1.90	1.90	1.90	-	2.13	2.12	2.12	-	2.37	2.37	2.36	-	2.64	2.64	2.64	-	2.96	2.96	2.96	-
		Amps	6.6	6.6	6.6	-	7.5	7.5	7.5	-	8.5	8.5	8.5	-	9.7	9.7	9.6	-	10.9	10.9	10.9	-	12.4	12.4	12.4	-
		HI PR	252	254	255	-	292	293	294	-	333	334	335	-	377	378	380	-	424	425	427	-	475	476	478	-
		LO PR	120	122	125	-	128	129	132	-	134	135	138	-	139	140	143	-	144	146	149	-	151	152	155	-
	1125	MBh	29.6	30.0	30.9	-	29.4	29.8	30.6	-	28.6	29.0	29.9	-	27.4	27.8	28.6	-	25.8	26.2	27.1	-	24.4	24.8	25.7	-
		S/T	0.69	0.62	0.49	-	0.70	0.62	0.49	-	0.72	0.65	0.52	-	0.74	0.67	0.54	-	1.00	0.69	0.56	-	1.00	0.74	0.61	-
		ΔT	17	15	11	-	17	15	11	-	17	15	12	-	17	15	11	-	16	15	11	-	17	16	12	-
		kW	1.71	1.71	1.70	-	1.91	1.91	1.90	-	2.13	2.13	2.13	-	2.38	2.38	2.37	-	2.65	2.65	2.65	-	2.97	2.97	2.97	-
		Amps	6.6	6.6	6.6	-	7.6	7.6	7.5	-	8.6	8.6	8.6	-	9.7	9.7	9.7	-	11.0	10.9	10.9	-	12.4	12.4	12.4	-
		HI PR	255	256	258	-	294	295	297	-	335	336	338	-	379	380	382	-	427	428	430	-	478	479	480	-
		LO PR	123	124	127	-	130	132	134	-	136	138	141	-	142	143	146	-	147	148	151	-	153	155	158	-
75	870	MBh	28.5	28.9	29.7	31.0	28.2	28.6	29.4	30.7	27.5	27.9	28.7	30.0	26.2	**26.6**	27.5	28.7	24.7	25.1	25.9	27.2	23.3	23.7	24.5	25.8
		S/T	0.77	0.70	0.57	0.43	0.78	0.71	0.57	0.44	0.81	0.73	0.60	0.46	1.00	**0.75**	0.62	0.48	1.00	0.77	0.64	0.50	1.00	0.82	0.69	0.55
		ΔT	23	21	17	14	23	21	17	14	23	21	18	14	23	**21**	17	14	22	21	17	14	24	22	18	15
		kW	1.69	1.69	1.68	1.70	1.89	1.89	1.88	1.90	2.11	2.11	2.11	2.12	2.36	**2.36**	2.35	2.37	2.63	2.63	2.63	2.64	2.95	2.95	2.95	2.96
		Amps	6.5	6.5	6.5	6.6	7.5	7.5	7.4	7.5	8.5	8.5	8.5	8.5	9.6	**9.6**	9.6	9.7	10.9	10.9	10.8	10.9	12.3	12.3	12.3	12.4
		HI PR	250	251	253	257	289	290	292	297	330	331	333	337	374	**376**	377	382	422	423	425	429	473	474	476	480
		LO PR	118	120	123	128	125	127	130	135	131	133	136	141	137	**138**	141	146	142	143	146	151	148	150	153	158
	1000	MBh	29.0	29.4	30.2	31.5	28.8	29.1	30.0	31.3	28.0	28.4	29.3	30.5	26.8	**27.2**	28.0	29.3	25.2	25.6	26.5	27.7	23.8	24.2	25.0	26.3
		S/T	0.81	0.74	0.61	0.47	0.82	0.74	0.61	0.47	1.00	0.77	0.64	0.50	1.00	**0.79**	0.65	0.52	1.00	0.81	0.68	0.54	1.00	0.86	0.73	0.59
		ΔT	22	20	16	13	22	20	16	13	22	20	17	13	22	**20**	16	13	21	19	16	13	22	21	17	14
		kW	1.70	1.70	1.69	1.71	1.90	1.90	1.89	1.91	2.12	2.12	2.12	2.14	2.37	**2.37**	2.36	2.38	2.64	2.64	2.64	2.65	2.96	2.96	2.96	2.97
		Amps	6.6	6.6	6.6	6.6	7.5	7.5	7.5	7.6	8.5	8.5	8.5	8.6	9.7	**9.7**	9.6	9.7	10.9	10.9	10.9	11.0	12.4	12.4	12.3	12.4
		HI PR	253	254	256	260	292	293	295	299	333	334	336	340	377	**378**	380	384	425	426	427	432	475	476	478	482
		LO PR	120	122	125	130	128	129	132	137	134	135	138	143	139	**140**	143	148	144	146	149	153	151	152	155	160
	1125	MBh	29.6	30.0	30.9	32.2	29.4	29.8	30.6	31.9	28.7	29.1	29.9	31.2	27.4	**27.8**	28.6	29.9	25.9	26.3	27.1	28.4	24.5	24.8	25.7	27.0
		S/T	0.82	0.74	0.61	0.47	0.82	0.75	0.62	0.48	1.00	0.77	0.64	0.50	1.00	**0.79**	0.66	0.52	1.00	0.81	0.68	0.54	1.00	0.86	0.73	0.59
		ΔT	21	19	15	12	21	19	15	12	21	19	16	12	21	**19**	15	12	20	19	15	12	22	20	16	13
		kW	1.71	1.70	1.70	1.72	1.91	1.91	1.90	1.92	2.13	2.13	2.13	2.14	2.38	**2.38**	2.37	2.39	2.65	2.65	2.64	2.66	2.97	2.97	2.96	2.98
		Amps	6.6	6.6	6.6	6.7	7.6	7.5	7.5	7.6	8.6	8.6	8.6	8.6	9.7	**9.7**	9.7	9.7	10.9	10.9	10.9	11.0	12.4	12.4	12.4	12.5
		HI PR	255	256	258	262	294	295	297	301	335	336	338	342	379	**380**	382	387	427	428	430	434	478	479	481	485
		LO PR	123	124	127	132	130	132	135	139	136	138	141	146	142	**143**	146	151	147	148	151	156	153	155	158	163

IDB: Entering Indoor Dry Bulb Temperature

Shaded area reflects ACCA (TVA) Rating Conditions.

kW = Total system power

High and low pressures are measured at the liquid and suction service valves.

Amps = Outdoor unit amps (compressor + fan)

			OUTDOOR AMBIENT TEMPERATURE																							
			65ºF				75ºF				85ºF				95ºF				105ºF				115ºF			
			ENTERING INDOOR WET BULB TEMPERATURE																							
IDB	AIRFLOW		59	63	67	71	59	63	67	71	59	63	67	71	59	63	67	71	59	63	67	71	59	63	67	71
80	870	MBh	28.6	29.0	29.8	31.1	28.4	28.8	29.6	30.9	27.6	28.0	28.9	30.1	26.4	26.8	**27.6**	28.9	24.8	25.2	26.1	27.3	23.4	23.8	24.7	25.9
		S/T	0.90	0.82	0.69	0.55	1.00	0.83	0.70	0.56	1.00	0.85	0.72	0.58	1.00	0.87	**0.74**	0.60	1.00	0.89	0.76	0.62	1.00	1.00	0.81	0.67
		ΔT	27	25	22	18	27	25	21	18	27	25	22	18	27	25	**21**	18	26	25	21	18	28	26	22	19
		kW	1.69	1.69	1.68	1.70	1.89	1.89	1.88	1.90	2.12	2.11	2.11	2.13	2.36	2.36	**2.35**	2.37	2.63	2.63	2.63	2.64	2.95	2.95	2.95	2.96
		Amps	6.5	6.5	6.5	6.6	7.5	7.5	7.4	7.5	8.5	8.5	8.5	8.5	9.6	9.6	**9.6**	9.7	10.9	10.9	10.8	10.9	12.3	12.3	12.3	12.4
		HI PR	251	252	254	258	290	291	293	297	331	332	334	338	375	376	**378**	382	423	424	425	430	473	474	476	480
		LO PR	119	120	123	128	126	127	130	135	132	133	136	141	137	139	**142**	147	142	144	147	152	149	150	153	158
	1000	MBh	29.2	29.5	30.4	31.7	28.9	29.3	30.1	31.4	28.2	28.6	29.4	30.7	26.9	27.3	28.1	29.4	25.4	25.8	26.6	27.9	24.0	24.4	25.2	26.5
		S/T	0.93	0.86	0.73	0.59	1.00	0.87	0.73	0.59	1.00	0.89	0.76	0.62	1.00	0.91	0.78	0.64	1.00	1.00	0.80	0.66	1.00	1.00	0.85	0.71
		ΔT	26	24	20	17	26	24	20	17	26	24	21	17	26	24	20	17	25	24	20	17	27	25	21	18
		kW	1.70	1.70	1.69	1.71	1.90	1.90	1.90	1.91	2.13	2.12	2.12	2.14	2.37	2.37	2.36	2.38	2.64	2.64	2.64	2.65	2.96	2.96	2.96	2.97
		Amps	6.6	6.6	6.6	6.6	7.5	7.5	7.5	7.6	8.5	8.5	8.5	8.6	9.7	9.7	9.6	9.7	10.9	10.9	10.9	11.0	12.4	12.4	12.4	12.4
		HI PR	253	254	256	260	292	293	295	299	333	334	336	340	377	378	380	385	425	426	428	432	476	477	479	483
		LO PR	121	122	125	130	128	129	132	137	134	136	139	144	139	141	144	149	145	146	149	154	151	153	155	160
	1125	MBh	29.8	30.2	31.0	32.3	29.5	29.9	30.8	32.1	28.8	29.2	30.0	31.3	27.5	27.9	28.8	30.1	26.0	26.4	27.2	28.5	24.6	25.0	25.8	27.1
		S/T	1.00	0.87	0.73	0.59	1.00	0.87	0.74	0.60	1.00	0.90	0.76	0.63	1.00	0.92	0.78	0.64	1.00	1.00	0.80	0.67	1.00	1.00	0.86	0.72
		ΔT	25	23	19	16	25	23	19	16	25	23	20	16	25	23	19	16	24	23	19	16	26	24	20	17
		kW	1.71	1.71	1.70	1.72	1.91	1.91	1.90	1.92	2.13	2.13	2.13	2.14	2.38	2.38	2.37	2.39	2.65	2.65	2.65	2.66	2.97	2.97	2.97	2.98
		Amps	6.6	6.6	6.6	6.7	7.6	7.5	7.5	7.6	8.6	8.6	8.6	8.6	9.7	9.7	9.7	9.8	11.0	10.9	10.9	11.0	12.4	12.4	12.4	12.5
		HI PR	256	257	258	263	295	296	298	302	336	337	339	343	380	381	383	387	427	428	430	435	478	479	481	485
		LO PR	124	125	128	133	131	132	135	140	137	138	141	146	142	144	146	151	147	149	152	157	154	155	158	163
85	870	MBh	29.1	29.5	30.3	31.6	28.8	29.2	30.1	31.3	28.1	28.5	29.3	30.6	26.8	27.2	28.1	29.4	25.3	25.7	26.5	27.8	23.9	24.3	25.1	26.4
		S/T	1.00	0.92	0.79	0.65	1.00	0.93	0.80	0.66	1.00	0.95	0.82	0.68	1.00	1.00	0.84	0.70	1.00	1.00	0.86	0.72	1.00	1.00	0.91	0.77
		ΔT	30	29	25	22	30	28	25	22	31	29	25	22	30	28	25	22	30	28	25	21	31	29	26	22
		kW	1.69	1.69	1.69	1.70	1.89	1.89	1.89	1.90	2.12	2.12	2.11	2.13	2.36	2.36	2.36	2.37	2.64	2.63	2.63	2.65	2.96	2.95	2.95	2.97
		Amps	6.6	6.6	6.5	6.6	7.5	7.5	7.5	7.5	8.5	8.5	8.5	8.6	9.6	9.6	9.6	9.7	10.9	10.9	10.9	10.9	12.3	12.3	12.3	12.4
		HI PR	252	253	255	259	291	292	294	298	332	333	335	339	376	377	379	383	424	425	427	431	474	476	477	482
		LO PR	120	122	125	130	127	129	132	137	134	135	138	143	139	140	143	148	144	146	148	153	151	152	155	160
	1000	MBh	29.6	30.0	30.9	32.1	29.4	29.8	30.6	31.9	28.6	29.0	29.9	31.2	27.4	27.8	28.6	29.9	25.8	26.2	27.1	28.4	24.4	24.8	25.7	26.9
		S/T	1.00	0.96	0.83	0.69	1.00	0.96	0.83	0.69	1.00	1.00	0.86	0.72	1.00	1.00	0.88	0.74	1.00	1.00	0.90	0.76	1.00	1.00	0.95	0.81
		ΔT	29	27	24	20	29	27	24	20	29	28	24	21	29	27	24	20	29	27	24	20	30	28	25	21
		kW	1.70	1.70	1.70	1.71	1.90	1.90	1.90	1.91	2.13	2.13	2.12	2.14	2.37	2.37	2.37	2.38	2.65	2.64	2.64	2.66	2.97	2.96	2.96	2.98
		Amps	6.6	6.6	6.6	6.7	7.5	7.5	7.5	7.6	8.6	8.6	8.5	8.6	9.7	9.7	9.7	9.7	10.9	10.9	10.9	11.0	12.4	12.4	12.4	12.4
		HI PR	254	255	257	261	293	295	296	301	334	335	337	342	379	380	381	386	426	427	429	433	477	478	480	484
		LO PR	123	124	127	132	130	131	134	139	136	137	140	145	141	143	146	151	146	148	151	156	153	154	157	162
	1125	MBh	30.3	30.7	31.5	32.8	30.0	30.4	31.2	32.5	29.3	29.7	30.5	31.8	28.0	28.4	29.3	30.5	26.5	26.9	27.7	29.0	25.1	25.5	26.3	27.6
		S/T	1.00	0.96	0.83	0.69	1.00	0.97	0.84	0.70	1.00	1.00	0.86	0.72	1.00	1.00	0.88	0.74	1.00	1.00	0.90	0.76	1.00	1.00	1.00	0.81
		ΔT	28	27	23	20	28	26	23	19	29	27	23	20	28	26	23	19	28	26	23	19	29	27	24	20
		kW	1.71	1.71	1.71	1.72	1.91	1.91	1.91	1.92	2.14	2.14	2.13	2.15	2.38	2.38	2.38	2.39	2.65	2.65	2.65	2.67	2.97	2.97	2.97	2.98
		Amps	6.7	6.6	6.6	6.7	7.6	7.6	7.6	7.6	8.6	8.6	8.6	8.7	9.7	9.7	9.7	9.8	11.0	11.0	10.9	11.0	12.4	12.4	12.4	12.5
		HI PR	257	258	260	264	296	297	299	303	337	338	340	344	381	382	384	388	429	430	431	436	479	480	482	486
		LO PR	125	127	130	135	132	134	137	142	139	140	143	148	144	145	148	153	149	150	153	158	155	157	160	165

IDB: Entering Indoor Dry Bulb Temperature

Shaded area reflects AHRI Rating Conditions.

kW = Total system power

High and low pressures are measured at the liquid and suction service valves.

Amps = Outdoor unit amps (compressor + fan)

			Outdoor Ambient Temperature																							
			65ºF				75ºF				85ºF				95ºF				105ºF				115ºF			
			Entering Indoor Wet Bulb Temperature																							
IDB	Airflow		59	63	67	71	59	63	67	71	59	63	67	71	59	63	67	71	59	63	67	71	59	63	67	71
70	1070	MBh	36.3	36.8	37.9	-	36.0	36.5	37.5	-	35.0	35.5	36.6	-	33.4	33.9	35.0	-	31.5	32.0	33.0	-	29.7	30.2	31.2	-
		S/T	0.65	0.57	0.44	-	0.66	0.58	0.45	-	0.68	0.61	0.47	-	0.70	0.62	0.49	-	1.00	0.65	0.51	-	1.00	0.70	0.56	-
		ΔT	19	18	14	-	19	17	14	-	20	18	14	-	19	17	14	-	19	17	14	-	20	18	15	-
		kW	2.17	2.17	2.16	-	2.44	2.43	2.43	-	2.73	2.73	2.72	-	3.05	3.05	3.04	-	3.41	3.41	3.40	-	3.83	3.83	3.82	-
		Amps	8.3	8.3	8.2	-	9.5	9.5	9.5	-	10.8	10.8	10.8	-	12.3	12.3	12.3	-	13.9	13.9	13.9	-	15.9	15.9	15.8	-
		HI PR	263	265	266	-	305	306	308	-	348	349	351	-	394	395	397	-	444	446	447	-	498	499	501	-
		LO PR	121	123	126	-	129	130	133	-	135	137	140	-	140	142	145	-	146	147	150	-	152	154	157	-
	1200	MBh	36.8	37.3	38.4	-	36.5	37.0	38.1	-	35.6	36.1	37.2	-	34.0	34.5	35.5	-	32.0	32.5	33.6	-	30.2	30.7	31.8	-
		S/T	0.68	0.61	0.48	-	0.69	0.61	0.48	-	0.71	0.64	0.51	-	0.73	0.66	0.52	-	1.00	0.68	0.55	-	1.00	0.73	0.60	-
		ΔT	18	17	13	-	18	17	13	-	19	17	13	-	18	17	13	-	18	16	13	-	19	17	14	-
		kW	2.18	2.18	2.17	-	2.45	2.44	2.44	-	2.74	2.74	2.74	-	3.06	3.06	3.06	-	3.42	3.42	3.41	-	3.84	3.84	3.83	-
		Amps	8.3	8.3	8.3	-	9.5	9.5	9.5	-	10.9	10.9	10.9	-	12.4	12.4	12.3	-	14.0	14.0	14.0	-	15.9	15.9	15.9	-
		HI PR	266	267	268	-	307	308	310	-	350	351	353	-	396	398	399	-	447	448	450	-	500	501	503	-
		LO PR	123	125	128	-	131	132	135	-	137	138	142	-	142	144	147	-	148	149	152	-	154	156	159	-
	1350	MBh	37.6	38.1	39.2	-	37.3	37.8	38.9	-	36.3	36.8	37.9	-	34.7	35.2	36.3	-	32.8	33.3	34.3	-	31.0	31.5	32.5	-
		S/T	0.69	0.62	0.49	-	0.70	0.62	0.49	-	0.72	0.65	0.52	-	1.00	0.67	0.54	-	1.00	0.69	0.56	-	1.00	0.74	0.61	-
		ΔT	18	16	12	-	17	16	12	-	18	16	12	-	17	16	12	-	17	15	12	-	18	16	13	-
		kW	2.19	2.19	2.19	-	2.46	2.46	2.45	-	2.75	2.75	2.75	-	3.07	3.07	3.07	-	3.43	3.43	3.42	-	3.85	3.85	3.84	-
		Amps	8.4	8.4	8.4	-	9.6	9.6	9.6	-	10.9	10.9	10.9	-	12.4	12.4	12.4	-	14.1	14.0	14.0	-	16.0	16.0	15.9	-
		HI PR	268	269	271	-	309	310	312	-	352	354	355	-	399	400	402	-	449	450	452	-	503	504	505	-
		LO PR	126	127	130	-	133	135	138	-	139	141	144	-	145	146	149	-	150	152	155	-	157	158	161	-
75	1070	MBh	36.3	36.8	37.9	39.5	36.0	36.5	37.6	39.2	35.0	35.6	36.6	38.3	33.4	**33.9**	35.0	36.6	31.5	32.0	33.0	34.7	29.7	30.2	31.3	32.9
		S/T	0.77	0.70	0.57	0.43	0.78	0.71	0.57	0.44	1.00	0.73	0.60	0.46	1.00	**0.75**	0.62	0.48	1.00	0.77	0.64	0.50	1.00	0.82	0.69	0.55
		ΔT	24	22	18	14	24	22	18	14	24	22	18	15	24	**22**	18	14	23	21	18	14	24	23	19	15
		kW	2.17	2.17	2.16	2.18	2.43	2.43	2.43	2.45	2.73	2.73	2.72	2.74	3.05	**3.05**	3.04	3.06	3.41	3.40	3.40	3.42	3.83	3.82	3.82	3.84
		Amps	8.3	8.3	8.2	8.3	9.5	9.5	9.5	9.5	10.8	10.8	10.8	10.9	12.3	**12.3**	12.3	12.4	13.9	13.9	13.9	14.0	15.9	15.8	15.8	15.9
		HI PR	264	265	267	271	305	306	308	312	348	349	351	356	395	**396**	398	402	445	446	448	452	498	499	501	506
		LO PR	121	123	126	131	129	130	133	138	135	137	140	145	141	**142**	145	150	146	147	150	155	152	154	157	162
	1200	MBh	36.9	37.4	38.4	40.1	36.5	37.0	38.1	39.7	35.6	36.1	37.2	38.8	34.0	**34.5**	35.6	37.2	32.0	32.5	33.6	35.2	30.2	30.7	31.8	33.4
		S/T	0.81	0.73	0.60	0.46	0.81	0.74	0.61	0.47	1.00	0.76	0.63	0.49	1.00	**0.78**	0.65	0.51	1.00	0.80	0.67	0.53	1.00	1.00	0.72	0.58
		ΔT	23	21	17	14	23	21	17	13	23	21	17	14	23	**21**	17	13	22	20	17	13	24	22	18	14
		kW	2.18	2.18	2.17	2.19	2.44	2.44	2.44	2.46	2.74	2.74	2.73	2.75	3.06	**3.06**	3.05	3.07	3.42	3.42	3.41	3.43	3.84	3.84	3.83	3.85
		Amps	8.3	8.3	8.3	8.4	9.5	9.5	9.5	9.6	10.9	10.9	10.9	11.0	12.4	**12.3**	12.3	12.4	14.0	14.0	14.0	14.1	15.9	15.9	15.9	16.0
		HI PR	266	267	269	273	307	308	310	314	350	351	353	358	397	**398**	400	404	447	448	450	454	500	501	503	508
		LO PR	123	125	128	133	131	132	135	140	137	138	142	147	142	**144**	147	152	148	149	152	157	154	156	159	164
	1350	MBh	37.6	38.1	39.2	40.8	37.3	37.8	38.9	40.5	36.4	36.9	37.9	39.6	34.8	**35.3**	36.3	38.0	32.8	33.3	34.4	36.0	31.0	31.5	32.6	34.2
		S/T	0.82	0.74	0.61	0.47	0.82	0.75	0.62	0.48	1.00	0.78	0.64	0.50	1.00	**0.79**	0.66	0.52	1.00	0.82	0.68	0.54	1.00	1.00	0.73	0.59
		ΔT	22	20	16	13	22	20	16	13	22	20	16	13	22	**20**	16	13	21	19	16	12	23	21	17	13
		kW	2.19	2.19	2.18	2.20	2.46	2.45	2.45	2.47	2.75	2.75	2.75	2.77	3.07	**3.07**	3.07	3.09	3.43	3.43	3.42	3.44	3.85	3.85	3.84	3.86
		Amps	8.4	8.4	8.3	8.4	9.6	9.6	9.6	9.7	10.9	10.9	10.9	11.0	12.4	**12.4**	12.4	12.5	14.0	14.0	14.0	14.1	16.0	16.0	15.9	16.0
		HI PR	268	269	271	276	309	311	312	317	353	354	356	360	399	**400**	402	407	449	450	452	457	503	504	506	510
		LO PR	126	127	130	135	133	135	138	143	140	141	144	149	145	**146**	149	155	150	152	155	160	157	158	161	166

IDB: Entering Indoor Dry Bulb Temperature

Shaded area reflects ACCA (TVA) Rating Conditions.

kW = Total system power

High and low pressures are measured at the liquid and suction service valves.

Amps = Outdoor unit amps (compressor + fan)

			Outdoor Ambient Temperature																							
			65ºF				75ºF				85ºF				95ºF				105ºF				115ºF			
			Entering Indoor Wet Bulb Temperature																							
IDB	Airflow		59	63	67	71	59	63	67	71	59	63	67	71	59	63	67	71	59	63	67	71	59	63	67	71
80	1070	MBh	36.5	37.0	38.1	39.7	36.2	36.7	37.7	39.4	35.2	35.7	36.8	38.4	33.6	34.1	**35.2**	36.8	31.7	32.2	33.2	34.9	29.9	30.4	31.4	33.1
		S/T	0.90	0.82	0.69	0.55	1.00	0.83	0.70	0.56	1.00	0.85	0.72	0.58	1.00	0.87	**0.74**	0.60	1.00	1.00	0.76	0.62	1.00	1.00	0.81	0.67
		ΔT	28	26	22	19	28	26	22	19	28	26	23	19	28	26	**22**	19	28	26	22	18	29	27	23	20
		kW	2.17	2.17	2.16	2.18	2.43	2.43	2.43	2.45	2.73	2.73	2.72	2.74	3.05	3.05	**3.04**	3.06	3.41	3.41	3.40	3.42	3.83	3.83	3.82	3.84
		Amps	8.3	8.3	8.2	8.3	9.5	9.5	9.5	9.6	10.8	10.8	10.8	10.9	12.3	12.3	**12.3**	12.4	13.9	13.9	13.9	14.0	15.9	15.9	15.8	15.9
		HI PR	264	265	267	272	305	306	308	313	349	350	351	356	395	396	**398**	403	445	446	448	453	499	500	502	506
		LO PR	122	123	127	132	129	131	134	139	136	137	140	145	141	143	**146**	151	146	148	151	156	153	154	157	163
	1200	MBh	37.0	37.5	38.6	40.2	36.7	37.2	38.3	39.9	35.8	36.3	37.4	39.0	34.2	34.7	35.7	37.4	32.2	32.7	33.8	35.4	30.4	30.9	32.0	33.6
		S/T	1.00	0.86	0.72	0.58	1.00	0.86	0.73	0.59	1.00	0.89	0.75	0.61	1.00	0.90	0.77	0.63	1.00	1.00	0.79	0.65	1.00	1.00	0.84	0.71
		ΔT	27	25	21	18	27	25	21	18	27	25	22	18	27	25	21	18	27	25	21	17	28	26	22	19
		kW	2.18	2.18	2.17	2.19	2.45	2.44	2.44	2.46	2.74	2.74	2.74	2.76	3.06	3.06	3.06	3.08	3.42	3.42	3.41	3.43	3.84	3.84	3.83	3.85
		Amps	8.3	8.3	8.3	8.4	9.5	9.5	9.5	9.6	10.9	10.9	10.9	11.0	12.4	12.4	12.3	12.4	14.0	14.0	14.0	14.1	15.9	15.9	15.9	16.0
		HI PR	266	267	269	274	307	309	310	315	351	352	354	358	397	398	400	405	447	448	450	455	501	502	504	508
		LO PR	124	125	128	133	131	133	136	141	138	139	142	147	143	144	147	153	148	150	153	158	155	156	159	164
	1350	MBh	37.8	38.3	39.4	41.0	37.5	38.0	39.1	40.7	36.5	37.1	38.1	39.8	34.9	35.4	36.5	38.1	33.0	33.5	34.5	36.2	31.2	31.7	32.8	34.4
		S/T	1.00	0.87	0.73	0.60	1.00	0.87	0.74	0.60	1.00	0.90	0.77	0.63	1.00	1.00	0.78	0.64	1.00	1.00	0.81	0.67	1.00	1.00	0.86	0.72
		ΔT	26	24	20	17	26	24	20	17	26	24	21	17	26	24	20	17	26	24	20	16	27	25	21	18
		kW	2.19	2.19	2.19	2.21	2.46	2.46	2.45	2.47	2.75	2.75	2.75	2.77	3.07	3.07	3.07	3.09	3.43	3.43	3.42	3.44	3.85	3.85	3.84	3.86
		Amps	8.4	8.4	8.4	8.4	9.6	9.6	9.6	9.7	10.9	10.9	10.9	11.0	12.4	12.4	12.4	12.5	14.0	14.0	14.0	14.1	16.0	16.0	15.9	16.0
		HI PR	269	270	272	276	310	311	313	317	353	354	356	361	400	401	403	407	450	451	453	457	503	504	506	511
		LO PR	126	128	131	136	134	135	138	143	140	142	145	150	145	147	150	155	151	152	155	160	157	159	162	167
85	1070	MBh	37.1	37.6	38.7	40.3	36.8	37.3	38.3	40.0	35.8	36.3	37.4	39.0	34.2	34.7	35.8	37.4	32.3	32.8	33.8	35.5	30.5	31.0	32.0	33.7
		S/T	1.00	0.92	0.79	0.65	1.00	0.93	0.80	0.66	1.00	1.00	0.82	0.68	1.00	1.00	0.84	0.70	1.00	1.00	0.86	0.72	1.00	1.00	1.00	0.77
		ΔT	32	30	26	22	32	30	26	22	32	30	26	23	31	30	26	22	31	29	26	22	32	31	27	23
		kW	2.17	2.17	2.17	2.19	2.44	2.44	2.43	2.45	2.74	2.73	2.73	2.75	3.06	3.05	3.05	3.07	3.41	3.41	3.41	3.43	3.83	3.83	3.83	3.85
		Amps	8.3	8.3	8.3	8.4	9.5	9.5	9.5	9.6	10.9	10.9	10.8	10.9	12.3	12.3	12.3	12.4	14.0	14.0	13.9	14.0	15.9	15.9	15.9	16.0
		HI PR	265	266	268	273	307	308	310	314	350	351	353	357	396	397	399	404	446	448	449	454	500	501	503	507
		LO PR	124	125	128	133	131	133	136	141	137	139	142	147	143	144	147	152	148	150	153	158	155	156	159	164
	1200	MBh	37.6	38.1	39.2	40.8	37.3	37.8	38.9	40.5	36.4	36.9	38.0	39.6	34.8	35.3	36.4	38.0	32.8	33.3	34.4	36.0	31.0	31.5	32.6	34.2
		S/T	1.00	0.95	0.82	0.68	1.00	0.96	0.83	0.69	1.00	1.00	0.85	0.71	1.00	1.00	0.87	0.73	1.00	1.00	0.89	0.75	1.00	1.00	1.00	0.80
		ΔT	31	29	25	21	31	29	25	21	31	29	25	22	31	29	25	21	30	28	25	21	31	30	26	22
		kW	2.19	2.18	2.18	2.20	2.45	2.45	2.44	2.46	2.75	2.74	2.74	2.76	3.07	3.06	3.06	3.08	3.42	3.42	3.42	3.44	3.84	3.84	3.84	3.86
		Amps	8.4	8.3	8.3	8.4	9.6	9.6	9.5	9.6	10.9	10.9	10.9	11.0	12.4	12.4	12.4	12.4	14.0	14.0	14.0	14.1	15.9	15.9	15.9	16.0
		HI PR	267	269	270	275	309	310	312	316	352	353	355	359	398	399	401	406	448	450	451	456	502	503	505	509
		LO PR	126	127	130	135	133	134	137	143	139	141	144	149	145	146	149	154	150	151	155	160	157	158	161	166
	1350	MBh	38.4	38.9	40.0	41.6	38.1	38.6	39.7	41.3	37.2	37.7	38.7	40.4	35.5	36.0	37.1	38.8	33.6	34.1	35.2	36.8	31.8	32.3	33.4	35.0
		S/T	1.00	0.97	0.83	0.69	1.00	1.00	0.84	0.70	1.00	1.00	0.86	0.72	1.00	1.00	0.88	0.74	1.00	1.00	0.90	0.77	1.00	1.00	1.00	0.82
		ΔT	30	28	24	21	30	28	24	20	30	28	24	21	30	28	24	20	29	27	24	20	31	29	25	21
		kW	2.20	2.20	2.19	2.21	2.46	2.46	2.46	2.48	2.76	2.76	2.75	2.77	3.08	3.08	3.07	3.09	3.44	3.43	3.43	3.45	3.86	3.85	3.85	3.87
		Amps	8.4	8.4	8.4	8.5	9.6	9.6	9.6	9.7	11.0	11.0	10.9	11.0	12.4	12.4	12.4	12.5	14.1	14.1	14.0	14.1	16.0	16.0	16.0	16.1
		HI PR	270	271	273	277	311	312	314	319	354	355	357	362	401	402	404	408	451	452	454	458	504	506	507	512
		LO PR	128	130	133	138	135	137	140	145	142	143	146	151	147	149	152	157	153	154	157	162	159	161	164	169

IDB: Entering Indoor Dry Bulb Temperature

Shaded area reflects AHRI Rating Conditions.

kW = Total system power

High and low pressures are measured at the liquid and suction service valves.

Amps = Outdoor unit amps (compressor + fan)

			OUTDOOR AMBIENT TEMPERATURE																							
			65ºF				75ºF				85ºF				95ºF				105ºF				115ºF			
			ENTERING INDOOR WET BULB TEMPERATURE																							
IDB	AIRFLOW		59	63	67	71	59	63	67	71	59	63	67	71	59	63	67	71	59	63	67	71	59	63	67	71
70	1300	MBh	40.2	40.8	41.9	-	39.8	40.4	41.6	-	38.8	39.4	40.6	-	37.0	37.6	38.8	-	34.8	35.4	36.6	-	32.9	33.4	34.6	-
		S/T	0.66	0.59	0.45	-	0.67	0.59	0.46	-	0.69	0.62	0.48	-	1.00	0.64	0.50	-	1.00	0.66	0.52	-	1.00	0.71	0.58	-
		ΔT	18	17	13	-	18	16	13	-	19	17	13	-	18	16	13	-	18	16	13	-	19	17	14	-
		kW	2.44	2.44	2.44	-	2.72	2.72	2.72	-	3.03	3.03	3.03	-	3.37	3.37	3.36	-	3.74	3.74	3.73	-	4.18	4.18	4.17	-
		Amps	9.0	9.0	8.9	-	10.2	10.2	10.2	-	11.7	11.6	11.6	-	13.2	13.2	13.2	-	14.9	14.9	14.9	-	16.9	16.9	16.9	-
		HI PR	254	255	257	-	294	295	297	-	335	337	338	-	380	381	383	-	429	430	431	-	480	481	483	-
		LO PR	124	125	129	-	131	133	136	-	138	139	143	-	143	145	148	-	149	150	153	-	156	157	160	-
	1400	MBh	40.6	41.1	42.3	-	40.2	40.8	42.0	-	39.2	39.7	40.9	-	37.4	38.0	39.1	-	35.2	35.8	37.0	-	33.2	33.8	35.0	-
		S/T	0.69	0.61	0.48	-	0.69	0.62	0.48	-	0.72	0.64	0.51	-	1.00	0.66	0.53	-	1.00	0.68	0.55	-	1.00	0.73	0.60	-
		ΔT	18	16	13	-	18	16	13	-	18	16	13	-	18	16	13	-	17	16	12	-	19	17	13	-
		kW	2.45	2.45	2.45	-	2.73	2.73	2.72	-	3.04	3.04	3.03	-	3.37	3.37	3.37	-	3.75	3.75	3.74	-	4.19	4.19	4.18	-
		Amps	9.0	9.0	9.0	-	10.3	10.3	10.2	-	11.7	11.7	11.7	-	13.2	13.2	13.2	-	14.9	14.9	14.9	-	17.0	16.9	16.9	-
		HI PR	255	256	258	-	295	296	298	-	337	338	340	-	382	383	384	-	430	431	433	-	481	483	484	-
		LO PR	125	127	130	-	133	134	137	-	139	141	144	-	145	146	149	-	150	152	155	-	157	158	161	-
	1575	MBh	41.3	41.9	43.1	-	41.0	41.5	42.7	-	39.9	40.5	41.7	-	38.2	38.7	39.9	-	36.0	36.5	37.7	-	34.0	34.6	35.7	-
		S/T	0.71	0.63	0.50	-	0.71	0.64	0.50	-	0.74	0.66	0.53	-	1.00	0.68	0.55	-	1.00	0.70	0.57	-	1.00	0.75	0.62	-
		ΔT	17	15	12	-	17	15	12	-	17	15	12	-	17	15	12	-	17	15	11	-	18	16	13	-
		kW	2.46	2.46	2.46	-	2.74	2.74	2.74	-	3.05	3.05	3.04	-	3.39	3.38	3.38	-	3.76	3.76	3.75	-	4.20	4.20	4.19	-
		Amps	9.1	9.0	9.0	-	10.3	10.3	10.3	-	11.7	11.7	11.7	-	13.3	13.3	13.2	-	15.0	15.0	15.0	-	17.0	17.0	17.0	-
		HI PR	258	259	260	-	297	298	300	-	339	340	342	-	384	385	387	-	432	433	435	-	484	485	487	-
		LO PR	127	129	132	-	135	136	140	-	141	143	146	-	147	148	152	-	152	154	157	-	159	161	164	-
75	1300	MBh	40.2	40.8	42.0	43.8	39.9	40.4	41.6	43.4	38.8	39.4	40.6	42.4	37.0	**37.6**	38.8	40.6	34.9	35.4	36.6	38.4	32.9	33.4	34.6	36.4
		S/T	0.79	0.72	0.58	0.44	0.80	0.72	0.59	0.44	1.00	0.75	0.61	0.47	1.00	**0.77**	0.63	0.49	1.00	0.79	0.65	0.51	1.00	1.00	0.70	0.56
		ΔT	22	20	17	14	22	20	17	14	22	21	17	14	22	**20**	17	14	22	20	17	13	23	21	18	14
		kW	2.44	2.44	2.44	2.46	2.72	2.72	2.71	2.73	3.03	3.03	3.02	3.04	3.37	**3.36**	3.36	3.38	3.74	3.74	3.73	3.75	4.18	4.18	4.17	4.19
		Amps	9.0	9.0	8.9	9.0	10.2	10.2	10.2	10.3	11.6	11.6	11.6	11.7	13.2	**13.2**	13.2	13.2	14.9	14.9	14.9	15.0	16.9	16.9	16.9	17.0
		HI PR	254	255	257	261	294	295	297	301	336	337	338	343	380	**382**	383	388	429	430	432	436	480	481	483	488
		LO PR	124	126	129	134	131	133	136	141	138	139	143	148	143	**145**	148	153	149	150	153	159	156	157	160	165
	1400	MBh	40.6	41.2	42.3	44.2	40.2	40.8	42.0	43.8	39.2	39.8	40.9	42.8	37.4	**38.0**	39.2	41.0	35.2	35.8	37.0	38.8	33.3	33.8	35.0	36.8
		S/T	0.82	0.74	0.60	0.46	0.82	0.75	0.61	0.47	1.00	0.77	0.64	0.49	1.00	**0.79**	0.65	0.51	1.00	0.81	0.68	0.53	1.00	1.00	0.73	0.59
		ΔT	22	20	17	13	22	20	16	13	22	20	17	13	22	**20**	16	13	21	20	16	13	22	21	17	14
		kW	2.45	2.45	2.44	2.47	2.73	2.73	2.72	2.74	3.04	3.04	3.03	3.05	3.37	**3.37**	3.37	3.39	3.75	3.75	3.74	3.76	4.19	4.18	4.18	4.20
		Amps	9.0	9.0	9.0	9.1	10.3	10.3	10.2	10.3	11.7	11.7	11.7	11.7	13.2	**13.2**	13.2	13.3	14.9	14.9	14.9	15.0	16.9	16.9	16.9	17.0
		HI PR	256	257	258	263	295	296	298	303	337	338	340	344	382	**383**	385	389	430	431	433	437	482	483	485	489
		LO PR	125	127	130	135	133	134	137	142	139	141	144	149	145	**146**	149	154	150	152	155	160	157	158	161	167
	1575	MBh	41.4	41.9	43.1	44.9	41.0	41.6	42.7	44.6	40.0	40.5	41.7	43.5	38.2	**38.7**	39.9	41.7	36.0	36.6	37.7	39.6	34.0	34.6	35.8	37.6
		S/T	0.84	0.76	0.62	0.48	1.00	0.77	0.63	0.49	1.00	0.79	0.66	0.51	1.00	**0.81**	0.68	0.53	1.00	0.83	0.70	0.55	1.00	1.00	0.75	0.61
		ΔT	21	19	16	12	21	19	16	12	21	19	16	12	21	**19**	16	12	20	19	15	12	22	20	16	13
		kW	2.46	2.46	2.46	2.48	2.74	2.74	2.73	2.75	3.05	3.05	3.04	3.06	3.39	**3.38**	3.38	3.40	3.76	3.76	3.75	3.77	4.20	4.20	4.19	4.21
		Amps	9.1	9.0	9.0	9.1	10.3	10.3	10.3	10.4	11.7	11.7	11.7	11.8	13.3	**13.3**	13.2	13.3	15.0	15.0	15.0	15.1	17.0	17.0	17.0	17.1
		HI PR	258	259	261	265	298	299	300	305	339	340	342	346	384	**385**	387	391	432	433	435	440	484	485	487	491
		LO PR	128	129	132	137	135	136	140	145	141	143	146	151	147	**148**	152	157	152	154	157	162	159	161	164	169

IDB: Entering Indoor Dry Bulb Temperature

Shaded area reflects ACCA (TVA) Rating Conditions.

kW = Total system power

High and low pressures are measured at the liquid and suction service valves.

Amps = Outdoor unit amps (compressor + fan)

			Outdoor Ambient Temperature																							
			65ºF				75ºF				85ºF				95ºF				105ºF				115ºF			
			Entering Indoor Wet Bulb Temperature																							
IDB	Airflow		59	63	67	71	59	63	67	71	59	63	67	71	59	63	67	71	59	63	67	71	59	63	67	71
80	1300	MBh	40.4	41.0	42.2	44.0	40.1	40.6	41.8	43.6	39.0	39.6	40.8	42.6	37.3	37.8	**39.0**	40.8	35.1	35.6	36.8	38.6	33.1	33.6	34.8	36.6
		S/T	1.00	0.84	0.71	0.56	1.00	0.85	0.71	0.57	1.00	0.87	0.74	0.59	1.00	1.00	**0.76**	0.61	1.00	1.00	0.78	0.64	1.00	1.00	0.83	0.69
		ΔT	26	24	21	18	26	24	21	18	26	25	21	18	26	24	**21**	18	26	24	21	17	27	25	22	18
		kW	2.44	2.44	2.44	2.46	2.72	2.72	2.72	2.74	3.03	3.03	3.02	3.05	3.37	3.36	**3.36**	3.38	3.74	3.74	3.73	3.76	4.18	4.18	4.17	4.20
		Amps	9.0	9.0	8.9	9.0	10.2	10.2	10.2	10.3	11.7	11.6	11.6	11.7	13.2	13.2	**13.2**	13.3	14.9	14.9	14.9	15.0	16.9	16.9	16.9	17.0
		HI PR	255	256	258	262	294	296	297	302	336	337	339	343	381	382	**384**	388	429	430	432	437	481	482	484	488
		LO PR	125	126	129	134	132	133	137	142	138	140	143	148	144	145	**149**	154	149	151	154	159	156	158	161	166
	1400	MBh	40.8	41.4	42.5	44.4	40.4	41.0	42.2	44.0	39.4	40.0	41.2	43.0	37.6	38.2	39.4	41.2	35.4	36.0	37.2	39.0	33.5	34.0	35.2	37.0
		S/T	1.00	0.86	0.73	0.59	1.00	0.87	0.74	0.59	1.00	0.90	0.76	0.62	1.00	1.00	0.78	0.64	1.00	1.00	0.80	0.66	1.00	1.00	0.85	0.71
		ΔT	26	24	21	17	26	24	20	17	26	24	21	17	26	24	20	17	25	24	20	17	26	25	21	18
		kW	2.45	2.45	2.45	2.47	2.73	2.73	2.72	2.74	3.04	3.04	3.03	3.05	3.37	3.37	3.37	3.39	3.75	3.75	3.74	3.76	4.19	4.19	4.18	4.20
		Amps	9.0	9.0	9.0	9.1	10.3	10.3	10.2	10.3	11.7	11.7	11.7	11.8	13.2	13.2	13.2	13.3	14.9	14.9	14.9	15.0	16.9	16.9	16.9	17.0
		HI PR	256	257	259	263	296	297	299	303	337	338	340	345	382	383	385	389	431	432	433	438	482	483	485	489
		LO PR	126	127	130	136	133	135	138	143	140	141	144	150	145	147	150	155	151	152	155	160	157	159	162	167
	1575	MBh	41.6	42.1	43.3	45.1	41.2	41.8	43.0	44.8	40.2	40.7	41.9	43.7	38.4	38.9	40.1	41.9	36.2	36.8	38.0	39.8	34.2	34.8	36.0	37.8
		S/T	1.00	0.88	0.75	0.61	1.00	0.89	0.76	0.61	1.00	0.92	0.78	0.64	1.00	1.00	0.80	0.66	1.00	1.00	0.82	0.68	1.00	1.00	0.87	0.73
		ΔT	25	23	20	16	25	23	20	16	25	23	20	16	25	23	20	16	24	23	19	16	26	24	20	17
		kW	2.46	2.46	2.46	2.48	2.74	2.74	2.73	2.76	3.05	3.05	3.04	3.07	3.39	3.38	3.38	3.40	3.76	3.76	3.75	3.78	4.20	4.20	4.19	4.21
		Amps	9.1	9.0	9.0	9.1	10.3	10.3	10.3	10.4	11.7	11.7	11.7	11.8	13.3	13.3	13.2	13.3	15.0	15.0	15.0	15.1	17.0	17.0	17.0	17.1
		HI PR	258	259	261	266	298	299	301	305	340	341	342	347	384	386	387	392	433	434	436	440	484	485	487	492
		LO PR	128	130	133	138	135	137	140	145	142	144	147	152	148	149	152	157	153	154	158	163	160	161	164	169
85	1300	MBh	41.1	41.7	42.8	44.7	40.7	41.3	42.5	44.3	39.7	40.3	41.5	43.3	37.9	38.5	39.7	41.5	35.7	36.3	37.5	39.3	33.8	34.3	35.5	37.3
		S/T	1.00	0.94	0.81	0.66	1.00	0.95	0.81	0.67	1.00	1.00	0.84	0.70	1.00	1.00	0.86	0.71	1.00	1.00	0.88	0.74	1.00	1.00	1.00	0.79
		ΔT	30	28	25	21	30	28	25	21	30	28	25	21	30	28	25	21	29	28	24	21	31	29	25	22
		kW	2.45	2.45	2.44	2.46	2.73	2.73	2.72	2.74	3.04	3.03	3.03	3.05	3.37	3.37	3.37	3.39	3.75	3.74	3.74	3.76	4.19	4.18	4.18	4.20
		Amps	9.0	9.0	9.0	9.1	10.3	10.3	10.2	10.3	11.7	11.7	11.6	11.7	13.2	13.2	13.2	13.3	14.9	14.9	14.9	15.0	16.9	16.9	16.9	17.0
		HI PR	256	257	259	263	296	297	299	303	337	338	340	345	382	383	385	389	430	432	433	438	482	483	485	489
		LO PR	126	128	131	136	134	135	138	144	140	142	145	150	146	147	150	156	151	153	156	161	158	159	163	168
	1400	MBh	41.5	42.0	43.2	45.0	41.1	41.7	42.9	44.7	40.1	40.6	41.8	43.6	38.3	38.9	40.0	41.9	36.1	36.7	37.9	39.7	34.1	34.7	35.9	37.7
		S/T	1.00	0.97	0.83	0.69	1.00	1.00	0.84	0.69	1.00	1.00	0.86	0.72	1.00	1.00	0.88	0.74	1.00	1.00	0.90	0.76	1.00	1.00	1.00	0.81
		ΔT	29	27	24	21	29	27	24	21	29	28	24	21	29	27	24	20	29	27	24	20	30	28	25	21
		kW	2.46	2.46	2.45	2.47	2.74	2.73	2.73	2.75	3.04	3.04	3.04	3.06	3.38	3.38	3.37	3.39	3.75	3.75	3.75	3.77	4.19	4.19	4.19	4.21
		Amps	9.0	9.0	9.0	9.1	10.3	10.3	10.3	10.4	11.7	11.7	11.7	11.8	13.2	13.2	13.2	13.3	15.0	15.0	14.9	15.0	17.0	17.0	16.9	17.0
		HI PR	257	258	260	264	297	298	300	304	339	340	341	346	383	384	386	391	432	433	435	439	483	484	486	491
		LO PR	128	129	132	137	135	137	140	145	142	143	146	151	147	149	152	157	152	154	157	162	159	161	164	169
	1575	MBh	42.2	42.8	44.0	45.8	41.9	42.4	43.6	45.4	40.8	41.4	42.6	44.4	39.1	39.6	40.8	42.6	36.9	37.4	38.6	40.4	34.9	35.4	36.6	38.4
		S/T	1.00	0.99	0.85	0.71	1.00	1.00	0.86	0.71	1.00	1.00	0.88	0.74	1.00	1.00	0.90	0.76	1.00	1.00	1.00	0.78	1.00	1.00	1.00	0.83
		ΔT	28	26	23	20	28	26	23	20	28	27	23	20	28	26	23	20	28	26	23	19	29	27	24	20
		kW	2.47	2.47	2.46	2.48	2.75	2.74	2.74	2.76	3.06	3.05	3.05	3.07	3.39	3.39	3.38	3.41	3.77	3.76	3.76	3.78	4.21	4.20	4.20	4.22
		Amps	9.1	9.1	9.1	9.1	10.4	10.3	10.3	10.4	11.8	11.8	11.7	11.8	13.3	13.3	13.3	13.4	15.0	15.0	15.0	15.1	17.0	17.0	17.0	17.1
		HI PR	259	261	262	267	299	300	302	306	341	342	344	348	386	387	389	393	434	435	437	441	486	487	488	493
		LO PR	130	131	135	140	137	139	142	147	144	145	148	154	149	151	154	159	155	156	159	165	162	163	166	171

IDB: Entering Indoor Dry Bulb Temperature

Shaded area reflects AHRI Rating Conditions.

kW = Total system power

High and low pressures are measured at the liquid and suction service valves.

Amps = Outdoor unit amps (compressor + fan)

			Outdoor Ambient Temperature																							
			65ºF				75ºF				85ºF				95ºF				105ºF				115ºF			
			Entering Indoor Wet Bulb Temperature																							
IDB	Airflow		59	63	67	71	59	63	67	71	59	63	67	71	59	63	67	71	59	63	67	71	59	63	67	71
70	1400	MBh	45.9	46.5	47.9	-	45.5	46.1	47.5	-	44.3	44.9	46.3	-	42.2	42.9	44.2	-	39.7	40.4	41.7	-	37.4	38.1	39.4	-
		S/T	0.64	0.56	0.42	-	0.65	0.57	0.43	-	0.67	0.59	0.45	-	0.69	0.61	0.47	-	1.00	0.64	0.50	-	1.00	0.69	0.55	-
		ΔT	19	17	14	-	19	17	14	-	19	17	14	-	19	17	14	-	19	17	14	-	20	18	15	-
		kW	2.79	2.78	2.78	-	3.11	3.10	3.10	-	3.46	3.46	3.46	-	3.85	3.85	3.84	-	4.28	4.28	4.28	-	4.79	4.79	4.78	-
		Amps	10.2	10.2	10.2	-	11.7	11.7	11.6	-	13.3	13.3	13.3	-	15.1	15.1	15.0	-	17.1	17.0	17.0	-	19.4	19.4	19.3	-
		HI PR	256	257	259	-	296	297	299	-	338	339	341	-	384	385	387	-	433	434	436	-	485	486	488	-
		LO PR	122	124	127	-	130	131	134	-	136	138	141	-	142	143	146	-	147	149	152	-	154	156	159	-
	1560	MBh	46.4	47.0	48.4	-	46.0	46.6	48.0	-	44.8	45.4	46.8	-	42.7	43.4	44.7	-	40.2	40.9	42.2	-	37.9	38.6	39.9	-
		S/T	0.69	0.61	0.47	-	0.69	0.62	0.48	-	0.72	0.64	0.50	-	1.00	0.66	0.52	-	1.00	0.69	0.54	-	1.00	0.74	0.60	-
		ΔT	18	16	13	-	18	16	13	-	18	16	13	-	18	16	13	-	18	16	13	-	19	17	14	-
		kW	2.80	2.80	2.79	-	3.12	3.12	3.11	-	3.48	3.48	3.47	-	3.87	3.86	3.86	-	4.30	4.30	4.29	-	4.80	4.80	4.80	-
		Amps	10.3	10.3	10.2	-	11.7	11.7	11.7	-	13.4	13.4	13.3	-	15.1	15.1	15.1	-	17.1	17.1	17.1	-	19.4	19.4	19.4	-
		HI PR	258	259	260	-	298	299	301	-	340	341	343	-	386	387	388	-	435	436	437	-	487	488	490	-
		LO PR	124	125	129	-	131	133	136	-	138	139	142	-	143	145	148	-	149	150	153	-	155	157	160	-
	1800	MBh	47.3	47.9	49.3	-	46.9	47.5	48.9	-	45.7	46.3	47.7	-	43.6	44.3	45.6	-	41.1	41.8	43.1	-	38.8	39.5	40.8	-
		S/T	0.73	0.65	0.51	-	0.73	0.66	0.52	-	0.76	0.68	0.54	-	1.00	0.70	0.56	-	1.00	0.72	0.58	-	1.00	0.78	0.64	-
		ΔT	17	15	12	-	17	15	12	-	17	15	12	-	17	15	12	-	17	15	12	-	18	16	13	-
		kW	2.82	2.81	2.81	-	3.14	3.14	3.13	-	3.50	3.49	3.49	-	3.88	3.88	3.87	-	4.31	4.31	4.31	-	4.82	4.82	4.81	-
		Amps	10.3	10.3	10.3	-	11.8	11.8	11.8	-	13.4	13.4	13.4	-	15.2	15.2	15.2	-	17.2	17.2	17.2	-	19.5	19.5	19.5	-
		HI PR	260	261	263	-	300	302	303	-	343	344	346	-	388	389	391	-	437	438	440	-	489	491	492	-
		LO PR	126	128	131	-	134	135	138	-	140	142	145	-	146	147	150	-	151	153	156	-	158	159	163	-
75	1400	MBh	45.9	46.6	47.9	50.0	45.5	46.1	47.5	49.6	44.3	45.0	46.3	48.4	42.2	42.9	44.3	46.4	39.7	40.4	41.7	43.8	37.4	38.1	39.5	41.5
		S/T	0.77	0.69	0.55	0.41	0.78	0.70	0.56	0.41	1.00	0.73	0.59	0.44	1.00	0.75	0.61	0.46	1.00	0.77	0.63	0.48	1.00	1.00	0.68	0.54
		ΔT	23	21	18	14	23	21	18	14	23	21	18	14	23	21	18	14	22	21	17	14	24	22	19	15
		kW	2.79	2.78	2.78	2.80	3.11	3.10	3.10	3.12	3.46	3.46	3.45	3.48	3.85	3.85	3.84	3.87	4.28	4.28	4.27	4.30	4.79	4.79	4.78	4.81
		Amps	10.2	10.2	10.2	10.3	11.7	11.6	11.6	11.7	13.3	13.3	13.3	13.4	15.1	15.1	15.0	15.1	17.0	17.0	17.0	17.1	19.4	19.4	19.3	19.4
		HI PR	256	257	259	263	296	297	299	304	339	340	341	346	384	385	387	391	433	434	436	440	485	486	488	493
		LO PR	122	124	127	132	130	131	134	140	136	138	141	146	142	143	146	152	147	149	152	157	154	156	159	164
	1560	MBh	46.4	47.1	48.4	50.5	46.0	46.6	48.0	50.1	44.8	45.5	46.8	48.9	42.7	**43.4**	44.8	46.9	40.2	40.9	42.2	44.3	37.9	38.6	40.0	42.0
		S/T	0.82	0.74	0.60	0.46	0.83	0.75	0.61	0.46	1.00	0.78	0.64	0.49	1.00	**0.80**	0.66	0.51	1.00	0.82	0.68	0.53	1.00	1.00	0.73	0.58
		ΔT	22	20	17	13	22	20	17	13	22	20	17	14	22	**20**	17	13	22	20	17	13	23	21	18	14
		kW	2.80	2.80	2.79	2.81	3.12	3.12	3.11	3.14	3.48	3.47	3.47	3.49	3.86	**3.86**	3.86	3.88	4.30	4.29	4.29	4.31	4.80	4.80	4.79	4.82
		Amps	10.3	10.2	10.2	10.3	11.7	11.7	11.7	11.8	13.4	13.3	13.3	13.4	15.1	**15.1**	15.1	15.2	17.1	17.1	17.1	17.2	19.4	19.4	19.4	19.5
		HI PR	258	259	261	265	298	299	301	305	340	341	343	348	386	**387**	389	393	435	436	438	442	487	488	490	494
		LO PR	124	125	129	134	131	133	136	141	138	139	142	148	143	**145**	148	153	149	150	153	159	156	157	160	165
	1800	MBh	47.3	48.0	49.3	51.4	46.9	47.6	48.9	51.0	45.7	46.4	47.7	49.8	43.7	44.3	45.7	47.8	41.1	41.8	43.2	45.2	38.8	39.5	40.9	43.0
		S/T	0.86	0.78	0.64	0.50	1.00	0.79	0.65	0.50	1.00	0.82	0.68	0.53	1.00	0.84	0.70	0.55	1.00	0.86	0.72	0.57	1.00	1.00	0.77	0.62
		ΔT	21	19	16	12	21	19	16	12	21	19	16	13	21	19	16	12	21	19	15	12	22	20	17	13
		kW	2.82	2.81	2.81	2.83	3.14	3.13	3.13	3.15	3.49	3.49	3.49	3.51	3.88	3.88	3.87	3.90	4.31	4.31	4.30	4.33	4.82	4.82	4.81	4.84
		Amps	10.3	10.3	10.3	10.4	11.8	11.8	11.8	11.9	13.4	13.4	13.4	13.5	15.2	15.2	15.2	15.3	17.2	17.2	17.1	17.3	19.5	19.5	19.5	19.6
		HI PR	260	261	263	268	301	302	304	308	343	344	346	350	388	389	391	396	437	438	440	445	490	491	493	497
		LO PR	126	128	131	136	134	135	138	144	140	142	145	150	146	147	150	156	151	153	156	161	158	159	163	168

IDB: Entering Indoor Dry Bulb Temperature

Shaded area reflects ACCA (TVA) Rating Conditions.

kW = Total system power

High and low pressures are measured at the liquid and suction service valves.

Amps = Outdoor unit amps (compressor + fan)

			OUTDOOR AMBIENT TEMPERATURE																							
			65ºF				75ºF				85ºF				95ºF				105ºF				115ºF			
			ENTERING INDOOR WET BULB TEMPERATURE																							
IDB	AIRFLOW		59	63	67	71	59	63	67	71	59	63	67	71	59	63	67	71	59	63	67	71	59	63	67	71
80	1400	MBh	46.1	46.8	48.2	50.2	45.7	46.4	47.8	49.8	44.5	45.2	46.6	48.6	42.5	43.1	44.5	46.6	40.0	40.6	42.0	44.1	37.7	38.3	39.7	41.8
		S/T	1.00	0.82	0.68	0.54	1.00	0.83	0.69	0.54	1.00	0.86	0.72	0.57	1.00	0.88	0.74	0.59	1.00	1.00	0.76	0.61	1.00	1.00	0.81	0.66
		Delta T	27	25	22	18	27	25	22	18	27	25	22	18	27	25	22	18	26	25	21	18	27	26	22	19
		KW	2.79	2.78	2.78	2.80	3.11	3.10	3.10	3.12	3.46	3.46	3.46	3.48	3.85	3.85	3.84	3.87	4.28	4.28	4.28	4.30	4.79	4.79	4.78	4.81
		AMPS	10.2	10.2	10.2	10.3	11.7	11.7	11.6	11.7	13.3	13.3	13.3	13.4	15.1	15.1	15.0	15.1	17.1	17.0	17.0	17.1	19.4	19.4	19.3	19.4
		HI PR	256	258	259	264	297	298	300	304	339	340	342	346	384	386	387	392	433	435	436	441	486	487	489	493
		LO PR	123	124	128	133	130	132	135	140	137	138	142	147	142	144	147	152	148	149	152	158	155	156	159	164
	1560	MBh	46.6	47.3	48.7	50.8	46.2	46.9	48.3	50.3	45.0	45.7	47.1	49.1	43.0	43.6	**45.0**	47.1	40.5	41.1	42.5	44.6	38.2	38.8	40.2	42.3
		S/T	1.00	0.87	0.73	0.59	1.00	0.88	0.74	0.59	1.00	0.91	0.77	0.62	1.00	1.00	**0.79**	0.64	1.00	1.00	0.81	0.66	1.00	1.00	0.86	0.71
		Delta T	26	24	21	17	26	24	21	17	26	24	21	18	26	24	**21**	17	26	24	20	17	27	25	22	18
		KW	2.80	2.80	2.79	2.82	3.12	3.12	3.11	3.14	3.48	3.48	3.47	3.49	3.86	3.86	**3.86**	3.88	4.30	4.29	4.29	4.31	4.80	4.80	4.80	4.82
		AMPS	10.3	10.2	10.2	10.3	11.7	11.7	11.7	11.8	13.4	13.4	13.3	13.4	15.1	15.1	**15.1**	15.2	17.1	17.1	17.1	17.2	19.4	19.4	19.4	19.5
		HI PR	258	259	261	266	299	300	301	306	341	342	344	348	386	387	**389**	394	435	436	438	443	488	489	490	495
		LO PR	124	126	129	134	132	133	136	142	138	140	143	148	144	145	**149**	154	149	151	154	159	156	158	161	166
	1800	MBh	47.6	48.2	49.6	51.7	47.1	47.8	49.2	51.2	46.0	46.6	48.0	50.1	43.9	44.5	45.9	48.0	41.4	42.0	43.4	45.5	39.1	39.7	41.1	43.2
		S/T	1.00	0.91	0.77	0.62	1.00	0.92	0.78	0.63	1.00	0.95	0.80	0.66	1.00	1.00	0.82	0.68	1.00	1.00	0.85	0.70	1.00	1.00	0.90	0.75
		Delta T	25	23	20	16	25	23	20	16	25	23	20	16	25	23	20	16	24	23	19	16	26	24	20	17
		KW	2.82	2.81	2.81	2.83	3.14	3.13	3.13	3.15	3.49	3.49	3.49	3.51	3.88	3.88	3.87	3.90	4.31	4.31	4.31	4.33	4.82	4.82	4.81	4.84
		AMPS	10.3	10.3	10.3	10.4	11.8	11.8	11.8	11.9	13.4	13.4	13.4	13.5	15.2	15.2	15.2	15.3	17.2	17.2	17.2	17.3	19.5	19.5	19.5	19.6
		HI PR	261	262	264	268	301	302	304	308	343	344	346	351	389	390	392	396	438	439	441	445	490	491	493	498
		LO PR	127	128	132	137	134	136	139	144	141	142	145	151	146	148	151	156	152	153	156	162	159	160	163	168
85	1400	MBh	46.9	47.6	48.9	51.0	46.5	47.2	48.5	50.6	45.3	46.0	47.3	49.4	43.3	43.9	45.3	47.4	40.7	41.4	42.8	44.8	38.4	39.1	40.5	42.6
		S/T	1.00	0.93	0.79	0.64	1.00	0.94	0.80	0.65	1.00	1.00	0.82	0.67	1.00	1.00	0.84	0.69	1.00	1.00	0.86	0.72	1.00	1.00	1.00	0.77
		Delta T	30	28	25	22	30	28	25	22	30	29	25	22	30	28	25	22	30	28	25	21	31	29	26	22
		KW	2.79	2.79	2.78	2.81	3.11	3.11	3.11	3.13	3.47	3.47	3.46	3.49	3.86	3.86	3.85	3.87	4.29	4.29	4.28	4.31	4.80	4.79	4.79	4.81
		AMPS	10.2	10.2	10.2	10.3	11.7	11.7	11.7	11.8	13.3	13.3	13.3	13.4	15.1	15.1	15.1	15.2	17.1	17.1	17.0	17.2	19.4	19.4	19.4	19.5
		HI PR	258	259	261	265	298	299	301	305	340	341	343	348	386	387	389	393	435	436	438	442	487	488	490	494
		LO PR	125	126	129	135	132	134	137	142	139	140	143	149	144	146	149	154	150	151	154	159	156	158	161	166
	1560	MBh	47.4	48.1	49.4	51.5	47.0	47.7	49.0	51.1	45.8	46.5	47.8	49.9	43.8	44.4	45.8	47.9	41.2	41.9	43.3	45.3	38.9	39.6	41.0	43.1
		S/T	1.00	0.98	0.84	0.69	1.00	0.98	0.84	0.70	1.00	1.00	0.87	0.72	1.00	1.00	0.89	0.74	1.00	1.00	0.91	0.77	1.00	1.00	1.00	0.82
		Delta T	29	28	24	21	29	27	24	21	30	28	24	21	29	27	24	21	29	27	24	21	30	28	25	22
		KW	2.81	2.80	2.80	2.82	3.13	3.12	3.12	3.14	3.48	3.48	3.48	3.50	3.87	3.87	3.86	3.89	4.30	4.30	4.30	4.32	4.81	4.81	4.80	4.83
		AMPS	10.3	10.3	10.3	10.4	11.8	11.7	11.7	11.8	13.4	13.4	13.4	13.5	15.2	15.2	15.1	15.2	17.1	17.1	17.1	17.2	19.5	19.5	19.4	19.5
		HI PR	259	261	262	267	300	301	303	307	342	343	345	349	387	389	390	395	436	438	439	444	489	490	492	496
		LO PR	126	128	131	136	134	135	138	144	140	142	145	150	146	147	150	156	151	153	156	161	158	159	162	168
	1800	MBh	48.3	49.0	50.3	52.4	47.9	48.6	49.9	52.0	46.7	47.4	48.7	50.8	44.7	45.3	46.7	48.8	42.2	42.8	44.2	46.3	39.9	40.5	41.9	44.0
		S/T	1.00	1.00	0.88	0.73	1.00	1.00	0.88	0.74	1.00	1.00	0.91	0.76	1.00	1.00	0.93	0.78	1.00	1.00	0.95	0.80	1.00	1.00	1.00	0.86
		Delta T	28	26	23	20	28	26	23	20	28	27	23	20	28	26	23	20	28	26	23	19	29	27	24	21
		KW	2.82	2.82	2.82	2.84	3.14	3.14	3.14	3.16	3.50	3.50	3.49	3.52	3.89	3.89	3.88	3.90	4.32	4.32	4.31	4.34	4.83	4.82	4.82	4.84
		AMPS	10.4	10.4	10.3	10.4	11.8	11.8	11.8	11.9	13.5	13.5	13.4	13.5	15.2	15.2	15.2	15.3	17.2	17.2	17.2	17.3	19.5	19.5	19.5	19.6
		HI PR	262	263	265	269	302	303	305	310	345	346	347	352	390	391	393	397	439	440	442	446	491	492	494	499
		LO PR	129	130	133	139	136	138	141	146	143	144	147	153	148	150	153	158	154	155	158	163	160	162	165	170

IDB: Entering Indoor Dry Bulb Temperature

Shaded area reflects AHRI Rating Conditions.

kW = Total system power

High and low pressures are measured at the liquid and suction service valves.

Amps = Outdoor unit amps (compressor + fan)

			Outdoor Ambient Temperature																							
			65ºF				75ºF				85ºF				95ºF				105ºF				115ºF			
			Entering Indoor Wet Bulb Temperature																							
IDB	Airflow		59	63	67	71	59	63	67	71	59	63	67	71	59	63	67	71	59	63	67	71	59	63	67	71
70	1400	MBh	45.9	46.5	47.9	-	45.5	46.1	47.5	-	44.3	44.9	46.3	-	42.2	42.9	44.2	-	39.8	40.4	41.8	-	37.5	38.1	39.5	-
		S/T	0.66	0.59	0.45	-	0.67	0.59	0.46	-	0.69	0.62	0.48	-	0.71	0.64	0.50	-	1.00	0.66	0.52	-	1.00	0.71	0.57	-
		ΔT	19	17	14	-	19	17	14	-	19	17	14	-	19	17	14	-	19	17	13	-	20	18	15	-
		kW	2.69	2.69	2.69	-	3.01	3.01	3.00	-	3.36	3.36	3.35	-	3.74	3.74	3.73	-	4.16	4.16	4.15	-	4.66	4.66	4.65	-
		Amps	9.9	9.9	9.8	-	11.3	11.3	11.3	-	12.9	12.9	12.9	-	14.7	14.6	14.6	-	16.6	16.6	16.6	-	18.9	18.9	18.8	-
		HI PR	249	250	252	-	288	289	290	-	328	330	331	-	372	373	375	-	420	421	423	-	470	471	473	-
		LO PR	121	122	125	-	128	129	132	-	134	136	139	-	140	141	144	-	145	146	149	-	151	153	156	-
	1600	MBh	46.7	47.3	48.7	-	46.3	46.9	48.3	-	45.1	45.7	47.1	-	43.1	43.7	45.1	-	40.6	41.2	42.6	-	38.3	39.0	40.3	-
		S/T	0.70	0.62	0.49	-	0.70	0.63	0.49	-	0.73	0.65	0.52	-	0.75	0.67	0.54	-	1.00	0.69	0.56	-	1.00	0.75	0.61	-
		ΔT	18	16	13	-	18	16	13	-	18	16	13	-	18	16	13	-	18	16	12	-	19	17	13	-
		kW	2.71	2.71	2.70	-	3.02	3.02	3.02	-	3.37	3.37	3.37	-	3.75	3.75	3.75	-	4.18	4.18	4.17	-	4.68	4.67	4.67	-
		Amps	9.9	9.9	9.9	-	11.4	11.4	11.3	-	13.0	13.0	13.0	-	14.7	14.7	14.7	-	16.7	16.7	16.6	-	18.9	18.9	18.9	-
		HI PR	251	252	254	-	290	291	293	-	331	332	334	-	375	376	377	-	422	423	425	-	473	474	475	-
		LO PR	123	124	127	-	130	132	135	-	136	138	141	-	142	143	146	-	147	149	152	-	154	155	158	-
	1800	MBh	47.7	48.4	49.7	-	47.3	47.9	49.3	-	46.1	46.8	48.1	-	44.1	44.7	46.1	-	41.6	42.2	43.6	-	39.3	40.0	41.3	-
		S/T	0.71	0.63	0.50	-	0.71	0.64	0.50	-	0.74	0.66	0.53	-	1.00	0.68	0.55	-	1.00	0.70	0.57	-	1.00	0.75	0.62	-
		ΔT	17	15	12	-	17	15	12	-	17	15	12	-	17	15	12	-	17	15	11	-	18	16	13	-
		kW	2.72	2.72	2.71	-	3.04	3.03	3.03	-	3.39	3.39	3.38	-	3.77	3.77	3.76	-	4.19	4.19	4.18	-	4.69	4.69	4.68	-
		Amps	10.0	10.0	10.0	-	11.4	11.4	11.4	-	13.1	13.0	13.0	-	14.8	14.8	14.8	-	16.7	16.7	16.7	-	19.0	19.0	19.0	-
		HI PR	253	255	256	-	292	293	295	-	333	334	336	-	377	378	380	-	424	426	427	-	475	476	478	-
		LO PR	125	127	130	-	133	134	137	-	139	141	144	-	144	146	149	-	150	151	154	-	156	158	161	-
75	1400	MBh	45.9	46.5	47.9	50.0	45.5	46.1	47.5	49.5	44.3	44.9	46.3	48.4	42.3	**42.9**	44.3	46.3	39.8	40.4	41.8	43.8	37.5	38.2	39.5	41.6
		S/T	0.79	0.71	0.58	0.44	0.80	0.72	0.59	0.44	1.00	0.75	0.61	0.47	1.00	**0.76**	0.63	0.49	1.00	0.79	0.65	0.51	1.00	0.84	0.70	0.56
		ΔT	23	21	18	14	23	21	18	14	23	21	18	14	23	**21**	18	14	23	21	17	14	24	22	19	15
		kW	2.69	2.69	2.68	2.71	3.01	3.00	3.00	3.02	3.36	3.35	3.35	3.37	3.74	**3.73**	3.73	3.75	4.16	4.16	4.15	4.18	4.66	4.66	4.65	4.67
		Amps	9.9	9.9	9.8	9.9	11.3	11.3	11.3	11.4	12.9	12.9	12.9	13.0	14.6	**14.6**	14.6	14.7	16.6	16.6	16.6	16.7	18.9	18.9	18.8	18.9
		HI PR	249	250	252	256	288	289	291	295	329	330	331	336	373	**374**	375	380	420	421	423	427	470	472	473	478
		LO PR	121	122	125	130	128	129	132	137	134	136	139	144	140	**141**	144	149	145	146	149	154	151	153	156	161
	1600	MBh	46.7	47.4	48.7	50.8	46.3	47.0	48.3	50.4	45.1	45.8	47.1	49.2	43.1	**43.7**	45.1	47.2	40.6	41.3	42.6	44.7	38.3	39.0	40.3	42.4
		S/T	0.83	0.75	0.62	0.47	0.83	0.76	0.62	0.48	1.00	0.78	0.65	0.51	1.00	**0.80**	0.67	0.52	1.00	0.82	0.69	0.55	1.00	1.00	0.74	0.60
		ΔT	22	20	17	13	22	20	17	13	22	20	17	13	22	**20**	17	13	22	20	16	13	23	21	18	14
		kW	2.71	2.70	2.70	2.72	3.02	3.02	3.01	3.04	3.37	3.37	3.36	3.39	3.75	**3.75**	3.74	3.77	4.18	4.17	4.17	4.19	4.67	4.67	4.67	4.69
		Amps	9.9	9.9	9.9	10.0	11.4	11.4	11.3	11.4	13.0	13.0	12.9	13.1	14.7	**14.7**	14.7	14.8	16.7	16.6	16.6	16.7	18.9	18.9	18.9	19.0
		HI PR	251	252	254	258	290	291	293	297	331	332	334	338	375	**376**	378	382	422	423	425	429	473	474	476	480
		LO PR	123	124	127	132	130	132	135	140	137	138	141	146	142	**143**	146	151	147	149	152	157	154	155	158	163
	1800	MBh	47.7	48.4	49.7	51.8	47.3	48.0	49.3	51.4	46.2	46.8	48.1	50.2	44.1	**44.8**	46.1	48.2	41.6	42.3	43.6	45.7	39.4	40.0	41.4	43.4
		S/T	0.83	0.76	0.62	0.48	0.84	0.76	0.63	0.49	1.00	0.79	0.65	0.51	1.00	**0.81**	0.67	0.53	1.00	0.83	0.70	0.55	1.00	1.00	0.75	0.61
		ΔT	21	19	16	12	21	19	16	12	21	19	16	12	21	**19**	16	12	21	19	15	12	22	20	17	13
		kW	2.72	2.72	2.71	2.74	3.03	3.03	3.03	3.05	3.39	3.38	3.38	3.40	3.77	**3.76**	3.76	3.78	4.19	4.19	4.18	4.21	4.69	4.69	4.68	4.70
		Amps	10.0	10.0	10.0	10.1	11.4	11.4	11.4	11.5	13.0	13.0	13.0	13.1	14.8	**14.8**	14.7	14.9	16.7	16.7	16.7	16.8	19.0	19.0	19.0	19.1
		HI PR	254	255	257	261	293	294	295	300	333	334	336	341	377	**378**	380	384	425	426	427	432	475	476	478	482
		LO PR	126	127	130	135	133	134	137	142	139	141	144	149	144	**146**	149	154	150	151	154	159	156	158	161	166

IDB: Entering Indoor Dry Bulb Temperature

Shaded area reflects ACCA (TVA) Rating Conditions.

kW = Total system power

High and low pressures are measured at the liquid and suction service valves.

Amps = Outdoor unit amps (compressor + fan)

			OUTDOOR AMBIENT TEMPERATURE																							
			65ºF				75ºF				85ºF				95ºF				105ºF				115ºF			
			ENTERING INDOOR WET BULB TEMPERATURE																							
IDB	AIRFLOW		59	63	67	71	59	63	67	71	59	63	67	71	59	63	67	71	59	63	67	71	59	63	67	71
80	1400	MBh	46.1	46.8	48.1	50.2	45.7	46.4	47.7	49.8	44.5	45.2	46.5	48.6	42.5	43.1	**44.5**	46.6	40.0	40.7	42.0	44.1	37.8	38.4	39.7	41.8
		S/T	0.91	0.84	0.70	0.56	1.00	0.84	0.71	0.57	1.00	0.87	0.73	0.59	1.00	0.89	**0.75**	0.61	1.00	1.00	0.78	0.63	1.00	1.00	0.83	0.69
		ΔT	27	25	22	18	27	25	22	18	27	26	22	19	27	25	**22**	18	27	25	22	18	28	26	23	19
		kW	2.69	2.69	2.69	2.71	3.01	3.01	3.00	3.02	3.36	3.36	3.35	3.37	3.74	3.74	**3.73**	3.75	4.16	4.16	4.15	4.18	4.66	4.66	4.65	4.68
		Amps	9.9	9.9	9.8	9.9	11.3	11.3	11.3	11.4	12.9	12.9	12.9	13.0	14.7	14.6	**14.6**	14.7	16.6	16.6	16.6	16.7	18.9	18.9	18.8	18.9
		HI PR	249	250	252	257	288	289	291	295	329	330	332	336	373	374	**376**	380	420	421	423	427	471	472	474	478
		LO PR	121	123	126	131	128	130	133	138	135	136	139	144	140	142	**145**	150	145	147	150	155	152	153	156	162
	1600	MBh	47.0	47.6	48.9	51.0	46.6	47.2	48.5	50.6	45.4	46.0	47.4	49.4	43.3	44.0	45.3	47.4	40.8	41.5	42.8	44.9	38.6	39.2	40.6	42.6
		S/T	1.00	0.88	0.74	0.60	1.00	0.88	0.75	0.60	1.00	0.91	0.77	0.63	1.00	0.93	0.79	0.65	1.00	1.00	0.81	0.67	1.00	1.00	0.86	0.72
		ΔT	26	24	21	17	26	24	21	17	26	25	21	17	26	24	21	17	26	24	21	17	27	25	22	18
		kW	2.71	2.71	2.70	2.72	3.02	3.02	3.02	3.04	3.37	3.37	3.37	3.39	3.75	3.75	3.75	3.77	4.18	4.18	4.17	4.19	4.68	4.67	4.67	4.69
		Amps	9.9	9.9	9.9	10.0	11.4	11.4	11.3	11.5	13.0	13.0	13.0	13.1	14.7	14.7	14.7	14.8	16.7	16.7	16.6	16.7	18.9	18.9	18.9	19.0
		HI PR	252	253	255	259	291	292	293	298	331	333	334	339	375	376	378	382	423	424	426	430	473	474	476	480
		LO PR	123	125	128	133	131	132	135	140	137	138	142	147	142	144	147	152	148	149	152	157	154	156	159	164
	1800	MBh	48.0	48.6	50.0	52.0	47.6	48.2	49.6	51.6	46.4	47.0	48.4	50.4	44.4	45.0	46.3	48.4	41.9	42.5	43.9	45.9	39.6	40.2	41.6	43.7
		S/T	1.00	0.88	0.75	0.61	1.00	0.89	0.75	0.61	1.00	0.91	0.78	0.64	1.00	1.00	0.80	0.66	1.00	1.00	0.82	0.68	1.00	1.00	0.87	0.73
		ΔT	25	23	20	16	25	23	20	16	25	24	20	17	25	23	20	16	25	23	20	16	26	24	21	17
		kW	2.72	2.72	2.71	2.74	3.04	3.03	3.03	3.05	3.39	3.39	3.38	3.40	3.77	3.76	3.76	3.78	4.19	4.19	4.18	4.21	4.69	4.69	4.68	4.71
		Amps	10.0	10.0	10.0	10.1	11.4	11.4	11.4	11.5	13.1	13.0	13.0	13.1	14.8	14.8	14.8	14.9	16.7	16.7	16.7	16.8	19.0	19.0	19.0	19.1
		HI PR	254	255	257	261	293	294	296	300	334	335	337	341	378	379	381	385	425	426	428	432	476	477	478	483
		LO PR	126	128	131	136	133	135	138	143	140	141	144	149	145	146	149	155	150	152	155	160	157	158	161	166
85	1400	MBh	46.9	47.5	48.9	50.9	46.5	47.1	48.5	50.5	45.3	45.9	47.3	49.4	43.3	43.9	45.3	47.3	40.8	41.4	42.8	44.8	38.5	39.2	40.5	42.6
		S/T	1.00	0.94	0.80	0.66	1.00	0.95	0.81	0.67	1.00	1.00	0.84	0.69	1.00	1.00	0.85	0.71	1.00	1.00	0.88	0.73	1.00	1.00	0.93	0.79
		ΔT	31	29	26	22	31	29	26	22	31	29	26	22	31	29	26	22	31	29	25	22	32	30	26	23
		kW	2.70	2.70	2.69	2.72	3.01	3.01	3.01	3.03	3.36	3.36	3.36	3.38	3.74	3.74	3.74	3.76	4.17	4.17	4.16	4.18	4.67	4.66	4.66	4.68
		Amps	9.9	9.9	9.9	10.0	11.3	11.3	11.3	11.4	12.9	12.9	12.9	13.0	14.7	14.7	14.6	14.8	16.6	16.6	16.6	16.7	18.9	18.9	18.9	19.0
		HI PR	251	252	253	258	290	291	292	297	330	331	333	337	374	375	377	381	422	423	424	429	472	473	475	479
		LO PR	123	124	128	133	130	132	135	140	137	138	141	146	142	143	146	151	147	149	152	157	154	155	158	163
	1600	MBh	47.7	48.4	49.7	51.8	47.3	48.0	49.3	51.4	46.1	46.8	48.1	50.2	44.1	44.7	46.1	48.2	41.6	42.3	43.6	45.7	39.3	40.0	41.3	43.4
		S/T	1.00	0.98	0.84	0.70	1.00	0.98	0.85	0.71	1.00	1.00	0.87	0.73	1.00	1.00	0.89	0.75	1.00	1.00	0.91	0.77	1.00	1.00	1.00	0.82
		ΔT	30	28	25	21	30	28	24	21	30	28	25	21	30	28	24	21	30	28	24	21	31	29	25	22
		kW	2.71	2.71	2.71	2.73	3.03	3.03	3.02	3.05	3.38	3.38	3.37	3.40	3.76	3.76	3.75	3.78	4.18	4.18	4.18	4.20	4.68	4.68	4.67	4.70
		Amps	10.0	10.0	9.9	10.0	11.4	11.4	11.4	11.5	13.0	13.0	13.0	13.1	14.8	14.7	14.7	14.8	16.7	16.7	16.7	16.8	19.0	19.0	18.9	19.0
		HI PR	253	254	256	260	292	293	295	299	333	334	335	340	377	378	379	384	424	425	427	431	474	475	477	481
		LO PR	125	127	130	135	132	134	137	142	139	140	143	148	144	146	149	154	149	151	154	159	156	157	161	166
	1800	MBh	48.7	49.4	50.7	52.8	48.3	49.0	50.3	52.4	47.2	47.8	49.1	51.2	45.1	45.8	47.1	49.2	42.6	43.3	44.6	46.7	40.4	41.0	42.4	44.4
		S/T	1.00	0.98	0.85	0.71	1.00	1.00	0.85	0.71	1.00	1.00	0.88	0.74	1.00	1.00	0.90	0.76	1.00	1.00	0.92	0.78	1.00	1.00	1.00	0.83
		ΔT	29	27	24	20	29	27	24	20	29	27	24	20	29	27	23	20	29	27	23	20	30	28	24	21
		kW	2.73	2.73	2.72	2.74	3.04	3.04	3.03	3.06	3.39	3.39	3.39	3.41	3.77	3.77	3.77	3.79	4.20	4.19	4.19	4.21	4.70	4.69	4.69	4.71
		Amps	10.0	10.0	10.0	10.1	11.5	11.5	11.4	11.5	13.1	13.1	13.0	13.2	14.8	14.8	14.8	14.9	16.8	16.7	16.7	16.8	19.0	19.0	19.0	19.1
		HI PR	255	256	258	262	294	295	297	301	335	336	338	342	379	380	382	386	426	427	429	433	477	478	480	484
		LO PR	128	129	132	137	135	137	140	145	141	143	146	151	147	148	151	156	152	153	157	162	159	160	163	168

IDB: Entering Indoor Dry Bulb Temperature

Shaded area reflects AHRI Rating Conditions.

kW = Total system power

High and low pressures are measured at the liquid and suction service valves.

Amps = Outdoor unit amps (compressor + fan)

			Outdoor Ambient Temperature																							
			65ºF				75ºF				85ºF				95ºF				105ºF				115ºF			
			Entering Indoor Wet Bulb Temperature																							
IDB	Airflow		59	63	67	71	59	63	67	71	59	63	67	71	59	63	67	71	59	63	67	71	59	63	67	71
70	1790	MBh	58.2	59.0	60.8	-	57.7	58.5	60.3	-	56.2	57.0	58.8	-	53.6	54.5	56.2	-	50.5	51.3	53.0	-	47.6	48.4	50.1	-
		S/T	0.67	0.59	0.46	-	0.67	0.60	0.46	-	0.70	0.62	0.49	-	0.72	0.64	0.51	-	0.74	0.67	0.53	-	1.00	0.72	0.58	-
		ΔT	19	17	14	-	19	17	14	-	19	17	14	-	19	17	14	-	19	17	13	-	20	18	14	-
		kW	3.35	3.35	3.34	-	3.78	3.78	3.77	-	4.25	4.25	4.24	-	4.76	4.76	4.75	-	5.34	5.33	5.33	-	6.01	6.00	6.00	-
		Amps	13.2	13.2	13.1	-	15.1	15.1	15.1	-	17.3	17.3	17.2	-	19.6	19.6	19.6	-	22.2	22.2	22.2	-	25.3	25.3	25.3	-
		HI PR	258	259	261	-	298	299	301	-	340	341	343	-	386	387	389	-	435	436	438	-	487	488	490	-
		LO PR	116	118	121	-	123	125	128	-	130	131	134	-	135	136	139	-	140	141	144	-	146	148	150	-
	2000	MBh	59.1	59.9	61.6	-	58.6	59.4	61.1	-	57.1	57.9	59.6	-	54.5	55.3	57.0	-	51.3	52.1	53.9	-	48.4	49.3	51.0	-
		S/T	0.70	0.62	0.49	-	0.71	0.63	0.49	-	0.73	0.66	0.52	-	0.75	0.68	0.54	-	0.77	0.70	0.56	-	1.00	0.75	0.61	-
		ΔT	18	16	13	-	18	16	13	-	18	16	13	-	18	16	13	-	18	16	12	-	19	17	14	-
		kW	3.37	3.37	3.36	-	3.80	3.79	3.79	-	4.27	4.27	4.26	-	4.78	4.78	4.77	-	5.35	5.35	5.34	-	6.03	6.02	6.01	-
		Amps	13.2	13.2	13.2	-	15.2	15.2	15.1	-	17.4	17.3	17.3	-	19.7	19.7	19.6	-	22.3	22.3	22.3	-	25.4	25.4	25.3	-
		HI PR	260	261	263	-	300	301	303	-	342	343	345	-	388	389	391	-	437	438	440	-	489	490	492	-
		LO PR	118	120	123	-	125	127	130	-	131	133	136	-	136	138	141	-	142	143	146	-	148	149	152	-
	2250	MBh	60.3	61.1	62.8	-	59.8	60.6	62.3	-	58.3	59.1	60.8	-	55.7	56.5	58.2	-	52.5	53.4	55.1	-	49.7	50.5	52.2	-
		S/T	0.71	0.64	0.50	-	0.72	0.64	0.51	-	0.75	0.67	0.53	-	0.76	0.69	0.55	-	1.00	0.71	0.57	-	1.00	0.76	0.63	-
		ΔT	17	15	12	-	17	15	12	-	17	15	12	-	17	15	12	-	17	15	11	-	18	16	13	-
		kW	3.39	3.39	3.38	-	3.81	3.81	3.80	-	4.29	4.28	4.28	-	4.80	4.80	4.79	-	5.37	5.37	5.36	-	6.04	6.04	6.03	-
		Amps	13.3	13.3	13.3	-	15.3	15.3	15.2	-	17.4	17.4	17.4	-	19.8	19.8	19.7	-	22.4	22.4	22.4	-	25.5	25.5	25.4	-
		HI PR	262	263	265	-	302	303	305	-	345	346	347	-	390	391	393	-	439	440	442	-	491	492	494	-
		LO PR	121	122	125	-	128	129	132	-	134	135	138	-	139	140	143	-	144	145	148	-	150	152	155	-
75	1790	MBh	58.3	59.1	60.8	63.4	57.8	58.6	60.3	62.9	56.3	57.1	58.8	61.4	53.7	**54.5**	56.2	58.8	50.5	51.3	53.0	55.7	47.6	48.4	50.2	52.8
		S/T	0.80	0.72	0.59	0.44	0.80	0.73	0.59	0.45	0.83	0.75	0.62	0.47	1.00	**0.77**	0.64	0.49	1.00	0.79	0.66	0.52	1.00	0.85	0.71	0.57
		ΔT	23	21	18	14	23	21	18	14	23	21	18	14	23	**21**	18	14	23	21	17	14	24	22	19	15
		kW	3.35	3.35	3.34	3.37	3.78	3.77	3.77	3.80	4.25	4.25	4.24	4.27	4.76	**4.76**	4.75	4.78	5.33	5.33	5.32	5.36	6.01	6.00	5.99	6.03
		Amps	13.2	13.1	13.1	13.3	15.1	15.1	15.0	15.2	17.3	17.2	17.2	17.4	19.6	**19.6**	19.6	19.7	22.2	22.2	22.2	22.3	25.3	25.3	25.2	25.4
		HI PR	258	259	261	265	298	299	301	306	340	341	343	348	386	**387**	389	393	435	436	438	442	487	488	490	495
		LO PR	116	118	121	126	123	125	128	133	130	131	134	139	135	**136**	139	144	140	141	144	149	146	148	150	155
	2000	MBh	59.1	59.9	61.6	64.3	58.6	59.4	61.1	63.8	57.1	57.9	59.6	62.3	54.5	**55.3**	57.0	59.7	51.4	52.2	53.9	56.5	48.5	49.3	51.0	53.6
		S/T	0.83	0.75	0.62	0.47	0.84	0.76	0.62	0.48	0.86	0.79	0.65	0.51	1.00	**0.81**	0.67	0.53	1.00	0.83	0.69	0.55	1.00	0.88	0.74	0.60
		ΔT	22	20	17	13	22	20	17	13	22	20	17	13	22	**20**	17	13	22	20	16	13	23	21	18	14
		kW	3.37	3.37	3.36	3.39	3.79	3.79	3.78	3.82	4.27	4.26	4.26	4.29	4.78	**4.78**	4.77	4.80	5.35	5.35	5.34	5.37	6.02	6.02	6.01	6.04
		Amps	13.2	13.2	13.2	13.3	15.2	15.2	15.1	15.3	17.3	17.3	17.3	17.4	19.7	**19.7**	19.6	19.8	22.3	22.3	22.3	22.4	25.4	25.4	25.3	25.5
		HI PR	260	261	263	267	300	301	303	307	342	343	345	350	388	**389**	391	395	437	438	440	444	489	490	492	497
		LO PR	118	120	123	127	125	127	130	134	131	133	136	141	136	**138**	141	146	142	143	146	151	148	149	152	157
	2250	MBh	60.3	61.1	62.9	65.5	59.8	60.6	62.3	65.0	58.3	59.1	60.8	63.5	55.7	**56.5**	58.3	60.9	52.6	53.4	55.1	57.7	49.7	50.5	52.2	54.9
		S/T	0.84	0.77	0.63	0.49	0.85	0.77	0.64	0.49	1.00	0.80	0.66	0.52	1.00	**0.82**	0.68	0.54	1.00	0.84	0.70	0.56	1.00	0.89	0.76	0.61
		ΔT	21	19	16	12	21	19	16	12	21	20	16	12	21	**19**	16	12	21	19	16	12	22	20	17	13
		kW	3.39	3.38	3.38	3.41	3.81	3.81	3.80	3.83	4.29	4.28	4.27	4.31	4.80	**4.79**	4.79	4.82	5.37	5.37	5.36	5.39	6.04	6.04	6.03	6.06
		Amps	13.3	13.3	13.3	13.4	15.3	15.2	15.2	15.4	17.4	17.4	17.4	17.5	19.8	**19.8**	19.7	19.9	22.4	22.4	22.3	22.5	25.5	25.4	25.4	25.6
		HI PR	262	263	265	270	303	304	305	310	345	346	348	352	390	**391**	393	398	439	440	442	447	492	493	495	499
		LO PR	121	122	125	130	128	129	132	137	134	135	138	143	139	**140**	143	148	144	145	148	153	150	152	155	160

IDB: Entering Indoor Dry Bulb Temperature

Shaded area reflects ACCA (TVA) Rating Conditions.

kW = Total system power

High and low pressures are measured at the liquid and suction service valves.

Amps = Outdoor unit amps (compressor + fan)

			OUTDOOR AMBIENT TEMPERATURE																							
			65ºF				75ºF				85ºF				95ºF				105ºF				115ºF			
			ENTERING INDOOR WET BULB TEMPERATURE																							
IDB	AIRFLOW		59	63	67	71	59	63	67	71	59	63	67	71	59	63	67	71	59	63	67	71	59	63	67	71
80	1790	MBh	58.6	59.4	61.1	63.7	58.1	58.9	60.6	63.2	56.6	57.4	59.1	61.7	54.0	54.8	**56.5**	59.1	50.8	51.6	53.3	56.0	47.9	48.7	50.5	53.1
		S/T	0.92	0.85	0.71	0.57	1.00	0.85	0.72	0.57	1.00	0.88	0.74	0.60	1.00	0.90	**0.76**	0.62	1.00	0.92	0.78	0.64	1.00	1.00	0.84	0.69
		ΔT	27	25	22	18	27	25	22	18	27	25	22	18	27	25	**22**	18	27	25	21	18	28	26	23	19
		kW	3.35	3.35	3.34	3.38	3.78	3.78	3.77	3.80	4.25	4.25	4.24	4.27	4.76	4.76	**4.75**	4.79	5.34	5.33	5.33	5.36	6.01	6.00	6.00	6.03
		Amps	13.2	13.1	13.1	13.3	15.1	15.1	15.1	15.2	17.3	17.3	17.2	17.4	19.6	19.6	**19.6**	19.7	22.2	22.2	22.2	22.3	25.3	25.3	25.3	25.4
		HI PR	258	259	261	266	299	300	302	306	341	342	344	348	386	387	**389**	394	435	436	438	443	488	489	491	495
		LO PR	117	118	121	126	124	125	128	133	130	131	134	139	135	137	**140**	144	140	142	145	150	147	148	151	156
	2000	MBh	59.4	60.2	61.9	64.6	58.9	59.7	61.4	64.1	57.4	58.2	59.9	62.6	54.8	55.6	57.3	60.0	51.7	52.5	54.2	56.8	48.8	49.6	51.3	53.9
		S/T	0.96	0.88	0.74	0.60	1.00	0.89	0.75	0.61	1.00	0.91	0.78	0.63	1.00	0.93	0.79	0.65	1.00	0.95	0.82	0.67	1.00	1.00	0.87	0.73
		ΔT	26	24	21	17	26	24	21	17	26	25	21	18	26	24	21	17	26	24	21	17	27	25	22	18
		kW	3.37	3.37	3.36	3.39	3.80	3.79	3.79	3.82	4.27	4.27	4.26	4.29	4.78	4.78	4.77	4.80	5.35	5.35	5.34	5.38	6.02	6.02	6.01	6.05
		Amps	13.2	13.2	13.2	13.3	15.2	15.2	15.1	15.3	17.4	17.3	17.3	17.5	19.7	19.7	19.6	19.8	22.3	22.3	22.3	22.4	25.4	25.4	25.3	25.5
		HI PR	260	261	263	268	301	302	304	308	343	344	346	350	388	389	391	396	437	438	440	445	490	491	493	497
		LO PR	119	120	123	128	126	127	130	135	132	133	136	141	137	138	141	146	142	143	146	151	148	150	153	158
	2250	MBh	60.6	61.4	63.2	65.8	60.1	60.9	62.6	65.3	58.6	59.4	61.1	63.8	56.0	56.8	58.6	61.2	52.9	53.7	55.4	58.0	50.0	50.8	52.5	55.1
		S/T	0.97	0.89	0.76	0.61	1.00	0.90	0.76	0.62	1.00	0.92	0.79	0.64	1.00	0.94	0.81	0.66	1.00	1.00	0.83	0.69	1.00	1.00	0.88	0.74
		ΔT	25	23	20	16	25	23	20	16	25	24	20	17	25	23	20	16	25	23	20	16	26	24	21	17
		kW	3.39	3.39	3.38	3.41	3.81	3.81	3.80	3.84	4.29	4.28	4.28	4.31	4.80	4.80	4.79	4.82	5.37	5.37	5.36	5.39	6.04	6.04	6.03	6.06
		Amps	13.3	13.3	13.3	13.4	15.3	15.3	15.2	15.4	17.4	17.4	17.4	17.5	19.8	19.8	19.7	19.9	22.4	22.4	22.3	22.5	25.5	25.5	25.4	25.6
		HI PR	263	264	266	270	303	304	306	310	345	346	348	353	391	392	394	398	440	441	443	447	492	493	495	499
		LO PR	121	123	125	130	128	129	132	137	134	136	139	143	139	141	144	149	144	146	149	154	151	152	155	160
85	1790	MBh	59.5	60.3	62.1	64.7	59.0	59.8	61.6	64.2	57.5	58.3	60.1	62.7	54.9	55.8	57.5	60.1	51.8	52.6	54.3	56.9	48.9	49.7	51.4	54.1
		S/T	1.00	0.95	0.81	0.67	1.00	0.96	0.82	0.68	1.00	0.98	0.84	0.70	1.00	1.00	0.86	0.72	1.00	1.00	0.89	0.74	1.00	1.00	0.94	0.79
		ΔT	31	29	25	22	31	29	25	22	31	29	26	22	31	29	25	22	30	29	25	22	32	30	26	23
		kW	3.36	3.36	3.35	3.38	3.79	3.78	3.78	3.81	4.26	4.26	4.25	4.28	4.77	4.77	4.76	4.79	5.34	5.34	5.33	5.37	6.02	6.01	6.00	6.04
		Amps	13.2	13.2	13.2	13.3	15.1	15.1	15.1	15.2	17.3	17.3	17.3	17.4	19.7	19.6	19.6	19.8	22.3	22.3	22.2	22.4	25.3	25.3	25.3	25.4
		HI PR	260	261	262	267	300	301	303	307	342	343	345	349	388	389	390	395	437	438	439	444	489	490	492	496
		LO PR	119	120	123	128	126	127	130	135	132	133	136	141	137	138	141	146	142	143	146	151	148	150	153	158
	2000	MBh	60.4	61.2	62.9	65.5	59.9	60.7	62.4	65.0	58.4	59.2	60.9	63.5	55.8	56.6	58.3	60.9	52.6	53.4	55.2	57.8	49.7	50.6	52.3	54.9
		S/T	1.00	0.98	0.85	0.70	1.00	0.99	0.85	0.71	1.00	1.00	0.88	0.73	1.00	1.00	0.90	0.75	1.00	1.00	0.92	0.78	1.00	1.00	0.97	0.83
		ΔT	30	28	25	21	30	28	24	21	30	28	25	21	30	28	24	21	30	28	24	21	31	29	25	22
		kW	3.38	3.38	3.37	3.40	3.80	3.80	3.79	3.83	4.28	4.27	4.27	4.30	4.79	4.79	4.78	4.81	5.36	5.36	5.35	5.38	6.03	6.03	6.02	6.05
		Amps	13.3	13.3	13.2	13.4	15.2	15.2	15.2	15.3	17.4	17.4	17.3	17.5	19.7	19.7	19.7	19.8	22.4	22.3	22.3	22.5	25.4	25.4	25.4	25.5
		HI PR	261	263	264	269	302	303	305	309	344	345	347	351	390	391	392	397	439	440	441	446	491	492	494	498
		LO PR	120	122	125	130	127	129	132	137	134	135	138	143	139	140	143	148	144	145	148	153	150	152	154	159
	2250	MBh	61.6	62.4	64.1	66.8	61.1	61.9	63.6	66.2	59.6	60.4	62.1	64.7	57.0	57.8	59.5	62.2	53.8	54.7	56.4	59.0	51.0	51.8	53.5	56.1
		S/T	1.00	0.99	0.86	0.71	1.00	1.00	0.86	0.72	1.00	1.00	0.89	0.75	1.00	1.00	0.91	0.77	1.00	1.00	0.93	0.79	1.00	1.00	0.98	0.84
		ΔT	29	27	24	20	29	27	24	20	29	27	24	20	29	27	24	20	29	27	23	20	30	28	24	21
		kW	3.40	3.39	3.39	3.42	3.82	3.82	3.81	3.84	4.30	4.29	4.28	4.32	4.81	4.80	4.80	4.83	5.38	5.38	5.37	5.40	6.05	6.05	6.04	6.07
		Amps	13.4	13.3	13.3	13.5	15.3	15.3	15.3	15.4	17.5	17.5	17.4	17.6	19.8	19.8	19.8	19.9	22.4	22.4	22.4	22.5	25.5	25.5	25.5	25.6
		HI PR	264	265	267	271	304	305	307	312	346	348	349	354	392	393	395	399	441	442	444	448	493	494	496	501
		LO PR	123	124	127	132	130	131	134	139	136	137	140	145	141	142	145	150	146	148	150	155	153	154	157	162

IDB: Entering Indoor Dry Bulb Temperature

Shaded area reflects AHRI Rating Conditions.

kW = Total system power

High and low pressures are measured at the liquid and suction service valves.

Amps = Outdoor unit amps (compressor + fan)

GSZ140181K* / ARUF25B14A*+TXV

	OUTDOOR AMBIENT TEMPERATURE																
	65	60	55	50	47	45	40	35	30	25	20	17	15	10	5	0	-5
MBh	23.71	22.11	20.54	18.99	**18.00**	17.25	15.37	13.65	12.25	11.21	10.42	10.00	9.47	8.13	6.80	5.47	4.13
T/R	21.11	19.88	18.64	17.41	16.67	15.97	14.23	12.64	11.34	10.38	9.65	9.26	8.77	7.53	6.30	5.06	3.83
kW	1.51	1.48	1.45	1.42	**1.40**	1.39	1.36	1.33	1.30	1.27	1.24	1.22	1.21	1.18	1.15	1.12	1.09
Amps	7.2	6.6	6.1	5.7	5.5	5.3	5.0	4.7	4.4	4.2	4.0	3.8	3.8	3.5	3.3	3.0	2.7
COP	4.60	4.37	4.15	3.92	3.76	3.63	3.31	3.01	2.76	2.59	2.46	2.40	2.29	2.02	1.74	1.43	1.11

GSZ140241K* / ARUF25B14A*+TXV

	OUTDOOR AMBIENT TEMPERATURE																
	65	60	55	50	47	45	40	35	30	25	20	17	15	10	5	0	-5
MBh	30.74	28.63	26.55	24.50	**23.20**	22.20	19.70	17.43	15.59	14.20	13.16	12.60	11.89	10.13	8.36	6.59	4.83
T/R	27.37	25.74	24.10	22.46	21.48	20.55	18.24	16.14	14.43	13.15	12.18	11.67	11.01	9.38	7.74	6.10	4.47
kW	1.97	1.93	1.88	1.84	**1.81**	1.79	1.75	1.70	1.66	1.61	1.57	1.54	1.52	1.48	1.43	1.39	1.34
Amps	9.1	8.4	7.8	7.2	6.9	6.7	6.3	5.9	5.6	5.3	5.0	4.8	4.7	4.4	4.1	3.7	3.3
COP	4.57	4.36	4.14	3.91	3.76	3.63	3.31	3.00	2.76	2.58	2.46	2.40	2.29	2.01	1.71	1.39	1.05

GSZ140301K* / ARUF29B14 + TXV**

	OUTDOOR AMBIENT TEMPERATURE																
	65	60	55	50	47	45	40	35	30	25	20	17	15	10	5	0	-5
MBh	37.15	34.70	32.29	29.92	**28.40**	27.27	24.40	21.77	19.62	18.03	16.84	16.20	15.39	13.35	11.32	9.29	7.25
T/R	33.08	31.19	29.31	27.43	26.30	25.25	22.59	20.16	18.17	16.69	15.59	15.00	14.25	12.36	10.48	8.60	6.71
kW	2.48	2.42	2.37	2.31	**2.27**	2.25	2.19	2.14	2.08	2.02	1.96	1.93	1.90	1.85	1.79	1.73	1.67
Amps	11.9	10.9	10.1	9.4	9.0	8.8	8.3	7.8	7.4	7.0	6.6	6.4	6.2	5.8	5.4	5.0	4.5
COP	4.39	4.19	4.00	3.80	3.66	3.55	3.26	2.99	2.77	2.62	2.51	2.46	2.37	2.12	1.85	1.57	1.27

GSZ140361K* / ARUF37C14 + TXV**

	OUTDOOR AMBIENT TEMPERATURE																
	65	60	55	50	47	45	40	35	30	25	20	17	15	10	5	0	-5
MBh	42.72	39.94	37.21	34.52	**32.80**	31.52	28.28	25.30	22.87	21.06	19.72	19.00	18.08	15.78	13.48	11.18	8.88
T/R	38.04	35.91	33.78	31.65	30.37	29.19	26.19	23.43	21.17	19.50	18.26	17.59	16.74	14.61	12.48	10.35	8.22
kW	2.81	2.76	2.71	2.66	**2.63**	2.61	2.56	2.50	2.45	2.40	2.35	2.32	2.30	2.25	2.20	2.15	2.10
Amps	13.6	12.5	11.6	10.8	10.3	10.0	9.4	8.9	8.4	7.9	7.5	7.3	7.1	6.6	6.2	5.7	5.1
COP	4.46	4.24	4.03	3.81	3.66	3.55	3.24	2.96	2.73	2.57	2.46	2.40	2.30	2.06	1.80	1.53	1.24

GSZ140421K* /ARUF43C14 + TXV**

	OUTDOOR AMBIENT TEMPERATURE																
	65	60	55	50	47	45	40	35	30	25	20	17	15	10	5	0	-5
MBh	51.58	48.34	45.15	42.02	**40.00**	38.54	34.80	31.31	28.47	26.37	24.83	24.00	22.93	20.27	17.60	14.93	12.27
T/R	45.93	43.46	40.99	38.52	37.04	35.69	32.22	28.99	26.36	24.42	22.99	22.22	21.23	18.76	16.30	13.83	11.36
kW	3.41	3.34	3.27	3.21	**3.17**	3.14	3.08	3.01	2.94	2.88	2.81	2.77	2.74	2.68	2.61	2.54	2.48
Amps	16.4	15.1	14.0	13.0	12.4	12.1	11.4	10.7	10.1	9.5	9.0	8.7	8.5	8.0	7.4	6.8	6.1
COP	4.44	4.24	4.04	3.84	3.70	3.60	3.32	3.05	2.84	2.69	2.59	2.54	2.45	2.22	1.98	1.72	1.45

Calculations are based on nominal CFM and 70°F indoor dry bulb.
Note: Shaded area is AHRI Rating Conditions at 47°F outdoor ambient temperature.

Amps = Outdoor unit amps (comp.+fan)
kW = Total system power

GSZ140421K* - ARUF43D14A*+TXV

	OUTDOOR AMBIENT TEMPERATURE																
	65	60	55	50	47	45	40	35	30	25	20	17	15	10	5	0	-5
MBh	51.58	48.34	45.15	42.02	**40.00**	38.54	34.80	31.31	28.47	26.37	24.83	24.00	22.93	20.27	17.60	14.93	12.27
T/R	45.93	43.46	40.99	38.52	37.04	35.69	32.22	28.99	26.36	24.42	22.99	22.22	21.23	18.76	16.30	13.83	11.36
kW	3.41	3.34	3.27	3.21	**3.17**	3.14	3.08	3.01	2.94	2.88	2.81	2.77	2.74	2.68	2.61	2.54	2.48
Amps	16.5	15.2	14.0	13.0	12.5	12.2	11.4	10.7	10.2	9.6	9.1	8.8	8.6	8.0	7.5	6.8	6.1
COP	4.44	4.24	4.04	3.84	3.70	3.60	3.32	3.05	2.84	2.69	2.59	2.54	2.45	2.22	1.98	1.72	1.45

GSZ140481K* - ARUF61D14A*+TXV

	OUTDOOR AMBIENT TEMPERATURE																
	65	60	55	50	47	45	40	35	30	25	20	17	15	10	5	0	-5
MBh	56.58	53.20	49.88	46.61	**44.50**	42.97	39.18	35.56	32.58	30.41	28.84	28.00	26.90	24.15	21.40	18.65	15.90
T/R	50.37	47.83	45.28	42.73	41.21	39.84	36.28	32.92	30.17	28.16	26.71	25.93	24.91	22.36	19.81	17.27	14.72
kW	3.51	3.48	3.44	3.40	**3.38**	3.36	3.33	3.29	3.25	3.22	3.18	3.16	3.14	3.10	3.07	3.03	2.99
Amps	17.2	15.8	14.6	13.6	13.0	12.6	11.8	11.1	10.5	9.9	9.4	9.0	8.8	8.2	7.6	7.0	6.2
COP	4.72	4.49	4.25	4.02	3.86	3.74	3.45	3.17	2.94	2.77	2.66	2.60	2.51	2.28	2.04	1.80	1.56

GSZ140491K* - ARUF49C14A*+TXV

	OUTDOOR AMBIENT TEMPERATURE																
	65	60	55	50	47	45	40	35	30	25	20	17	15	10	5	0	-5
MBh	59.32	55.59	51.92	48.32	**46.00**	44.32	40.01	36.01	32.74	30.32	28.55	27.60	26.37	23.31	20.24	17.17	14.11
T/R	52.82	49.98	47.14	44.30	42.59	41.04	37.05	33.34	30.31	28.08	26.44	25.56	24.42	21.58	18.74	15.90	13.06
kW	3.96	3.87	3.79	3.70	**3.64**	3.61	3.52	3.43	3.34	3.25	3.16	3.11	3.08	2.99	2.90	2.81	2.72
Amps	19.1	17.5	16.2	15.1	14.5	14.1	13.2	12.4	11.7	11.1	10.5	10.1	9.9	9.3	8.6	7.9	7.1
COP	4.39	4.21	4.02	3.83	3.70	3.60	3.33	3.08	2.87	2.73	2.64	2.60	2.51	2.29	2.05	1.79	1.52

GSZ140601K* - ASPT61D14A*

	OUTDOOR AMBIENT TEMPERATURE																
	65	60	55	50	47	45	40	35	30	25	20	17	15	10	5	0	-5
MBh	75.71	71.04	66.44	61.91	**59.00**	56.89	51.54	46.52	42.41	39.39	37.18	36.00	34.47	30.63	26.80	22.97	19.13
T/R	67.41	63.86	60.31	56.76	54.63	52.70	47.72	43.07	39.27	36.47	34.43	33.33	31.91	28.36	24.81	21.26	17.71
kW	4.91	4.79	4.67	4.55	**4.48**	4.43	4.31	4.20	4.08	3.96	3.84	3.77	3.72	3.60	3.48	3.36	3.25
Amps	23.4	21.5	19.8	18.4	17.6	17.2	16.1	15.1	14.3	13.5	12.8	12.3	12.0	11.2	10.4	9.5	8.5
COP	4.52	4.35	4.17	3.99	3.86	3.76	3.50	3.25	3.05	2.92	2.84	2.80	2.71	2.49	2.25	2.00	1.73

Calculations are based on nominal CFM and 70°F indoor dry bulb.
Note: Shaded area is AHRI Rating Conditions at 47°F outdoor ambient temperature.

Amps = Outdoor unit amps (comp.+fan)
kW = Total system power

MODEL: VSZ140181B* + ARUF25B14 + TXV**

Conditions: 80 °F IBD, 67 °F IWB @ 610 CFM

Outdoor Tem. ° F.	Total BTU/h	Sensible BTU/h	Latent BTU/h	Total Watts
75	18,700	14,230	4,452	1,146
80	18,500	14,337	4,157	1,205
85	18,200	14,359	3,854	1,265
90	17,850	14,267	3,577	1,328
95	**17,400**	**14,082**	**3,322**	**1,394**
100	16,900	13,857	3,060	1,463
105	16,400	13,668	2,747	1,538
110	15,930	13,605	2,328	1,618
115	15,500	13,767	1,745	1,706
TVA Conditions @ 95° OD DB, 75° ID DB 63° ID WB				
95°	**16,800**	**13,753**	**3,020**	**1,395**

MODEL: VSZ140241A* + ARUF25B14 + TXV**

Conditions: 80 °F IBD, 67 °F IWB @ 870 CFM

Outdoor Tem. ° F.	Total BTU/h	Sensible BTU/h	Latent BTU/h	Total Watts
75	25,100	19,076	6,024	1,580
80	25,400	19,093	6,307	1,675
85	24,500	19,110	5,390	1,770
90	24,550	18,915	5,635	1,870
95	**23,400**	**18,720**	**4,680**	**1,970**
100	23,350	18,532	4,819	2,080
105	22,100	18,343	3,757	2,190
110	22,050	18,368	3,683	2,385
115	20,900	18,392	2,508	2,450
TVA Conditions @ 95° OD DB, 75° ID DB 63° ID WB				
95°	**22,600**	**18,532**	**4,068**	**1,970**

MODEL: VSZ140301A* + ARUF29B14 + TXV**

Conditions: 80 °F IBD, 67 °F IWB @ 870 CFM

Outdoor Tem. ° F.	Total BTU/h	Sensible BTU/h	Latent BTU/h	Total Watts
75	29,600	20,720	8,880	1,880
80	29,250	20,764	8,486	1,995
85	28,900	20,808	8,092	2,110
90	28,250	20,616	7,634	2,230
95	**27,600**	**20,424**	**7,176**	**2,350**
100	26,850	20,130	6,720	2,490
105	26,100	19,836	6,264	2,630
110	25,400	19,922	5,479	2,790
115	24,700	20,007	4,693	2,950
TVA Conditions @ 95° OD DB, 75° ID DB 63° ID WB				
95°	**26,600**	**19,950**	**6,650**	**2,360**

MODEL: VSZ140361A* + ARUF37C14 + TXV**

Conditions: 80 °F IBD, 67 °F IWB @ 1070 CFM

Outdoor Tem. ° F.	Total BTU/h	Sensible BTU/h	Latent BTU/h	Total Watts
75	37,700	26,390	11,310	2,430
80	37,250	26,443	10,807	2,575
85	36,800	26,496	10,304	2,720
90	36,000	26,272	9,728	2,880
95	**35,200**	**26,048**	**9,152**	**3,040**
100	34,200	25,640	8,560	3,220
105	33,200	25,232	7,968	3,400
110	32,300	25,333	6,967	3,610
115	31,400	25,434	5,966	3,820
TVA Conditions @ 95° OD DB, 75° ID DB 63° ID WB				
95°	**33,900**	**25,425**	**8,475**	**3,050**

MODEL: VSZ140421A* + ARUF43C14 + TXV**

Conditions: 80 °F IBD, 67 °F IWB @ 1300 CFM

Outdoor Tem. ° F.	Total BTU/h	Sensible BTU/h	Latent BTU/h	Total Watts
75	41,800	29,678	12,122	2,720
80	41,300	29,935	11,365	2,870
85	40,800	30,192	10,608	3,020
90	39,900	29,916	9,984	3,190
95	**39,000**	**29,640**	**9,360**	**3,360**
100	37,900	29,172	8,728	3,545
105	36,800	28,704	8,096	3,730
110	35,800	28,794	7,006	3,950
115	34,800	28,884	5,916	4,170
TVA Conditions @ 95° OD DB, 75° ID DB 63° ID WB				
95°	**37,600**	**28,952**	**8,648**	**3,360**

MODEL: VSZ140481K + ARUF61D14 + TXV**

Conditions: 80 °F IBD, 67 °F IWB @ 1560 CFM

Outdoor Tem. ° F.	Total BTU/h	Sensible BTU/h	Latent BTU/h	Total Watts
75	48,300	35,742	12,558	3,110
80	47,700	36,005	11,696	3,290
85	47,100	36,267	10,833	3,470
90	46,550	35,909	10,642	3,665
95	**45,000**	**35,550**	**9,450**	**3,860**
100	43,750	34,988	8,763	4,075
105	42,500	34,425	8,075	4,290
110	41,350	34,499	6,852	4,545
115	40,200	34,572	5,628	4,800
TVA Conditions @ 95° OD DB, 75° ID DB 63° ID WB				
95°	**43,400**	**34,720**	**8,680**	**3,860**

MODEL: VSZ140491A* + ARUF49C14 + TXV**

Conditions: 80 °F IBD, 67 °F IWB @ 1400 CFM

Outdoor Tem. ° F.	Total BTU/h	Sensible BTU/h	Latent BTU/h	Total Watts
75	47,700	33,867	13,833	3,000
80	47,100	33,906	13,194	3,175
85	46,500	33,945	12,555	3,350
90	45,500	33,660	11,840	3,540
95	**44,500**	**33,375**	**11,125**	**3,730**
100	43,250	33,068	10,183	3,940
105	42,000	32,760	9,240	4,150
110	40,850	32,856	7,995	4,400
115	39,700	32,951	6,749	4,650
TVA Conditions @ 95° OD DB, 75° ID DB 63° ID WB				
95°	**42,900**	**32,604**	**10,296**	**3,730**

MODEL: VSZ140601A* + ASPT61D14 + TXV**

Conditions: 80 °F IBD, 67 °F IWB @ 1790 CFM

Outdoor Tem. ° F.	Total BTU/h	Sensible BTU/h	Latent BTU/h	Total Watts
75	60,600	42,420	18,180	3,770
80	59,850	42,782	17,069	4,010
85	59,100	43,143	15,957	4,250
90	57,800	42,759	15,041	4,505
95	**56,500**	**42,375**	**14,125**	**4,760**
100	54,900	41,708	13,192	5,045
105	53,300	41,041	12,259	5,330
110	51,900	41,226	10,675	5,670
115	50,500	41,410	9,090	6,010
TVA Conditions @ 95° OD DB, 75° ID DB 63° ID WB				
95°	**54,500**	**41,420**	**13,080**	**4,770**

Outdoor Unit	Indoor Units		Cooling Ratings ^				TVA Ratings [3]		Heating Ratings ^			CFM	AHRI #
	Coils/Air Handlers	Furnaces	Total	Sens.	SEER [1]	EER [2]	Total	Sens.	HI [4]	HSPF [5]	Low [6]		
VSZ14 0181B*	ARUF25B14A*+TXV		17400	13,700	14.00	11.50	16,800	13,400	18000	8.20	10000	650	201692301
	ASPT25B14A*		18000	14,200	15.00	12.00	17,400	13,800	17200	8.20	10000	580	201692308
	ASPT29B14A*		18000	14,200	15.00	12.50	17,400	13,800	17200	8.50	10000	560	201692315
	AWUF31XX16A*+TXV		17200	13,500	15.00	12.50	16,600	13,200	17000	8.20	10000	620	201692322
	CA*F3636*6D*+MBVC1200**-1A*+TXV		17600	13,900	15.00	12.50	17,000	13,500	17600	8.20	10000	600	201692329
	CA*F3636*6D*+TXV	G*EC960302BNA*	17200	13,500	15.00	12.50	16,600	13,200	17400	8.20	10000	600	201692336
	CA*F3636*6D*+TXV	G*EC960402BNA*	17200	13,500	15.00	12.50	16,600	13,200	17400	8.20	10000	600	201692343
	CA*F3636*6D*+TXV	G*EC960603BNA*	17200	13,500	15.00	12.50	16,600	13,200	17400	8.20	10000	550	201692350
	CA*F3636*6D*+TXV	G*EC960803BNA*	17200	13,500	15.00	12.50	16,600	13,200	17400	8.20	10000	540	201692357
	CA*F3636*6D*+TXV	G*VC80603B*B*	17800	14,000	15.00	12.50	17,200	13,700	17800	8.20	10000	550	201692364
	CA*F3636*6D*+TXV	G*VC80803B*B*	17800	14,000	15.00	12.50	17,200	13,700	17800	8.20	10000	620	201692371
	CHPF3636B6C*+MBVC1200**-1A*+TXV		17600	13,900	15.00	12.50	17,000	13,500	17600	8.20	10000	600	201692378
	CHPF3636B6C*+TXV	G*EC960302BNA*	17200	13,500	15.00	12.50	16,600	13,200	17400	8.20	10000	600	201692385
	CHPF3636B6C*+TXV	G*EC960402BNA*	17200	13,500	15.00	12.50	16,600	13,200	17400	8.20	10000	600	201692392
	CHPF3636B6C*+TXV	G*EC960603BNA*	17200	13,500	15.00	12.50	16,600	13,200	17400	8.20	10000	550	201692399
	CHPF3636B6C*+TXV	G*EC960803BNA*	17200	13,500	15.00	12.50	16,600	13,200	17400	8.20	10000	540	201692406
	CHPF3636B6C*+TXV	G*EC960403BNA*	17600	13,900	15.00	12.50	17,000	13,500	17600	8.20	10000	550	201692413
	CHPF3636B6C*+TXV	G*VC80803B*B*	17800	14,000	15.00	12.50	17,200	13,700	17800	8.20	10000	620	201692420
	CHPF3636B6C*+TXV	G*VC80603B*B*	17800	14,000	15.00	12.50	17,200	13,700	17800	8.20	10000	600	201692427
	CSCF3036N6D*+MBVC1200**-1A*+TXV		17600	13,900	15.00	12.50	17,000	13,500	17600	8.20	10000	600	201692434
	CSCF3036N6D*+TXV	G*EC960302BNA*	17200	13,500	15.00	12.50	16,600	13,200	17400	8.20	10000	600	201692441
	CSCF3036N6D*+TXV	G*EC960402BNA*	17200	13,500	15.00	12.50	16,600	13,200	17400	8.20	10000	600	201692448
	CSCF3036N6D*+TXV	G*EC960603BNA*	17200	13,500	15.00	12.50	16,600	13,200	17400	8.20	10000	550	201692455
	CSCF3036N6D*+TXV	G*EC960803BNA*	17200	13,500	15.00	12.50	16,600	13,200	17400	8.20	10000	540	201692462
	CSCF3036N6D*+TXV	G*VC80603B*B*	17800	14,000	15.00	12.50	17,200	13,700	17800	8.20	10000	550	201692469
	CSCF3036N6D*+TXV	G*VC80803B*B*	17800	14,000	15.00	12.50	17,200	13,700	17800	8.20	10000	620	201692476
	CSCF3036N6D*+TXV	G*EC960403BNA*	17600	13,900	15.00	12.50	17,000	13,500	17600	8.20	10000	600	201692483
	AVPTC24B14A*		17200	13,500	14.50	12.00	16,600	13,200	17200	8.20	10000	640	201692490
	CA*F3137*6A*+EEP+TXV		17600	13,900	14.00	11.50	17,000	13,500	18000	8.20	10000	600	201692497
	CA*F3636*6D*+TXV	G*E80603B*B*	17800	14,000	15.00	12.00	17,200	13,700	17800	8.20	10000	665	201692504
	CA*F3636*6D*+TXV	G*VC80604B*B*	17600	13,900	14.50	12.00	17,000	13,500	17600	8.20	10000	620	201692511
	CA*F3636*6D*+TXV	G*VC960403BNA*	17600	13,900	14.50	12.00	17,000	13,500	17600	8.20	10000	600	201692518
	CA*F3636*6D*+TXV	G*VC960603BNA*	17600	13,900	14.50	12.00	17,000	13,500	17600	8.20	10000	600	201692525
	CA*F3636*6D*+TXV	G*VC960803BNA*	17600	13,900	14.50	12.00	17,000	13,500	17600	8.20	10000	600	201692532
	CA*F3636*6D*+TXV	G*EC960403BNA*	17200	13,500	14.50	12.20	16,600	13,200	17600	8.20	10000	600	201692539
	CHPF3636B6C*+TXV	G*E80603B*B*	17800	14,000	14.50	12.00	17,200	13,700	17800	8.20	10000	665	201692546
	CHPF3636B6C*+TXV	G*VC80604B*B*	17600	13,900	14.50	12.00	17,000	13,500	17600	8.20	10000	620	201692553
	CHPF3636B6C*+TXV	G*VC960403BNA*	17600	13,900	14.50	12.00	17,000	13,500	17600	8.20	10000	600	201692560
	CHPF3636B6C*+TXV	G*VC960603BNA*	17600	13,900	14.50	12.00	17,000	13,500	17600	8.20	10000	600	201692567
	CHPF3636B6C*+TXV	G*VC960803BNA*	17600	13,900	14.50	12.00	17,000	13,500	17600	8.20	10000	600	201692574
	CSCF3036N6D*+EEP+TXV		17600	13,900	14.00	11.50	17,000	13,500	17600	8.20	10000	600	201692581
	CSCF3036N6D*+TXV	G*VC80604B*B*	17600	13,900	14.50	12.00	17,000	13,500	17600	8.20	10000	620	201692588
	CSCF3036N6D*+TXV	G*VC960403BNA*	17600	13,900	14.50	12.00	17,000	13,500	17600	8.20	10000	600	201692595
	CSCF3036N6D*+TXV	G*VC960603BNA*	17600	13,900	14.50	12.00	17,000	13,500	17600	8.20	10000	600	201692602
	CSCF3036N6D*+TXV	G*VC960803BNA*	17600	13,900	14.50	12.00	17,000	13,500	17600	8.20	10000	600	201692609
	ARUF25B14A*		17600	13,900	14.00	11.50	17,000	13,500	18000	8.20	10000	650	201692686
	AWUF31XX16A*		17200	13,500	14.50	12.00	16,600	13,200	17000	8.20	10000	620	201692707
	CSCF3036N6D*+TXV	G*E80603B*B*	17800	14,000	14.50	12.00	17,200	13,700	17800	8.20	10000	665	201692770
VSZ14 0241A*	ARUF25B14A*		23,200	18,600	14.0	11.5	22,400	18,400	23,200	8.2	13,000	870	7995768
	ARUF25B14A*+TXV		23,200	18,600	14.0	11.5	22,400	18,400	23,200	8.2	12,600	870	7995769
	ASPT25B14A*		23,200	18,600	14.5	12.0	22,400	18,400	23,200	8.2	13,400	800	8242653

See Notes on Page 40.

Outdoor Unit	Indoor Units		Cooling Ratings ^				TVA Ratings [3]		Heating Ratings ^			CFM	AHRI #
	Coils/Air Handlers	Furnaces	Total	Sens.	SEER [1]	EER [2]	Total	Sens.	Hi [4]	HSPF [5]	Low [6]		
VSZ14 0241A* (Contd.)	ASPT29B14A*		23,400	18,700	15.0	12.5	22,600	18,500	23,200	8.5	13,400	790	8242655
	AVPTC24B14A*		23,200	18,600	14.5	12.0	22,400	18,400	23,200	8.2	13,400	860	7995770
	AWUF31XX16A*		22,800	18,200	14.5	12.0	22,000	18,100	23,200	8.2	13,000	845	7995771
	AWUF31XX16A*+TXV		22,800	18,200	15.0	12.5	22,000	18,100	23,200	8.2	13,000	845	7995772
	CA*F3137*6A*+EEP+TXV		23,600	18,900	14.0	11.5	22,800	18,700	23,200	8.2	13,000	870	7995773
	CA*F3636*6D*	G*EC960403BNA*	22,200	17,800	14.0	12.0	21,400	17,900	22,200	8.2	13,000	800	10338368
	CA*F3636*6D*	G*VC80603B*B*	23,200	19,200	14.5	12.0	22,400	18,700	22,800	8.2	13,000	750	9924329
	CA*F3636*6D*	G*VC80803B*B*	23,200	19,200	14.5	12.0	22,400	18,700	22,800	8.2	13,000	750	9924333
	CA*F3636*6D*	G*VC80804C*B*	23,000	19,000	14.5	12.0	22,200	18,600	22,800	8.2	13,000	800	9924337
	CA*F3636*6D*	A*EC960302BNA*	23,000	18,400	14.5	12.0	22,200	18,200	22,800	8.2	13,000	800	7995794
	CA*F3636*6D*	A*EC960402BNA*	23,000	18,400	14.5	12.0	22,200	18,200	22,800	8.2	13,000	820	7995795
	CA*F3636*6D*	A*EC960603BNA*	23,000	18,400	14.5	12.0	22,200	18,200	22,800	8.2	13,000	840	7995796
	CA*F3636*6D*	A*EC960803BNA*	23,000	18,400	14.5	12.0	22,200	18,200	22,800	8.2	13,000	770	7995797
	CA*F3636*6D*	A*EH800603B*A*	23,200	18,600	14.5	12.0	22,400	18,400	23,000	8.2	13,000	860	7995798
	CA*F3636*6D*	A*VC80604B*B*	23,000	18,400	14.5	12.0	22,200	18,200	22,800	8.2	13,000	850	7995799
	CA*F3636*6D*	A*VC960403BNA*	23,000	18,400	14.5	12.0	22,200	18,200	23,200	8.2	13,000	800	7995800
	CA*F3636*6D*	A*VC960603BNA*	23,000	18,400	14.5	12.0	22,200	18,200	23,200	8.2	13,000	810	7995801
	CA*F3636*6D*	A*VC960803BNA*	23,000	18,400	14.5	12.0	22,200	18,200	23,200	8.2	13,000	810	7995802
	CA*F3636*6D*	G*E80603B*B*	23,200	18,600	14.5	12.0	22,400	18,400	23,000	8.2	13,000	860	7995803
	CA*F3636*6D*	G*EC960302BNA*	23,000	18,400	14.5	12.0	22,200	18,200	22,800	8.2	13,000	800	7995804
	CA*F3636*6D*	G*EC960402BNA*	23,000	18,400	14.5	12.0	22,200	18,200	22,800	8.2	13,000	820	7995805
	CA*F3636*6D*	G*EC960603BNA*	23,000	18,400	14.5	12.0	22,200	18,200	22,800	8.2	13,000	840	7995806
	CA*F3636*6D*	G*EC960803BNA*	23,000	18,400	14.5	12.0	22,200	18,200	22,800	8.2	13,000	770	7995807
	CA*F3636*6D*	G*VC80604B*B*	23,000	18,400	14.5	12.0	22,200	18,200	22,800	8.2	13,000	850	7995808
	CA*F3636*6D*	G*VC960403BNA*	23,000	18,400	14.5	12.0	22,200	18,200	23,200	8.2	13,000	800	7995809
	CA*F3636*6D*	G*VC960603BNA*	23,000	18,400	14.5	12.0	22,200	18,200	23,200	8.2	13,000	810	7995810
	CA*F3636*6D*	G*VC960803BNA*	23,000	18,400	14.5	12.0	22,200	18,200	23,200	8.2	13,000	810	7995811
	CA*F3636*6D*+MBVC1200**-1A*		23,600	18,900	14.5	12.0	22,800	18,700	23,200	8.5	13,000	855	7995774
	CA*F3636*6D*+MBVC1200**-1A*+TXV		23,600	18,900	15.0	12.5	22,800	18,700	23,200	8.5	13,000	855	7995775
	CA*F3636*6D*+TXV	G*EC960403BNA*	22,200	17,800	14.5	12.0	21,400	17,900	22,200	8.2	13,000	800	10338369
	CA*F3636*6D*+TXV	G*VC80603B*B*	23,200	19,200	14.5	12.0	22,400	18,700	22,800	8.2	13,000	750	9924330
	CA*F3636*6D*+TXV	G*VC80803B*B*	23,200	19,200	14.5	12.0	22,400	18,700	22,800	8.2	13,000	750	9924334
	CA*F3636*6D*+TXV	G*VC80804C*B*	23,000	19,000	15.0	12.5	22,200	18,600	22,800	8.2	13,000	800	9924338
	CA*F3636*6D*+TXV	A*EC960302BNA*	23,000	18,400	15.0	12.5	22,200	18,200	22,800	8.2	13,000	800	7995776
	CA*F3636*6D*+TXV	A*EC960402BNA*	23,000	18,400	15.0	12.5	22,200	18,200	22,800	8.2	13,000	820	7995777
	CA*F3636*6D*+TXV	A*EC960603BNA*	23,000	18,400	15.0	12.5	22,200	18,200	22,800	8.2	13,000	840	7995778
	CA*F3636*6D*+TXV	A*EC960803BNA*	23,000	18,400	15.0	12.5	22,200	18,200	22,800	8.2	13,000	770	7995779
	CA*F3636*6D*+TXV	A*EH800603B*A*	23,200	18,600	14.5	12.0	22,400	18,400	23,000	8.2	13,000	860	7995780
	CA*F3636*6D*+TXV	A*VC80604B*B*	23,000	18,400	15.0	12.5	22,200	18,200	22,800	8.2	13,000	850	7995781
	CA*F3636*6D*+TXV	A*VC960403BNA*	23,000	18,400	14.5	12.0	22,200	18,200	23,200	8.2	13,000	800	7995782
	CA*F3636*6D*+TXV	A*VC960603BNA*	23,000	18,400	14.5	12.0	22,200	18,200	23,200	8.2	13,000	810	7995783
	CA*F3636*6D*+TXV	A*VC960803BNA*	23,000	18,400	14.5	12.0	22,200	18,200	23,200	8.2	13,000	810	7995784
	CA*F3636*6D*+TXV	G*E80603B*B*	23,200	18,600	14.5	12.0	22,400	18,400	23,000	8.2	13,000	860	7995785
	CA*F3636*6D*+TXV	G*EC960302BNA*	23,000	18,400	15.0	12.5	22,200	18,200	22,800	8.2	13,000	800	7995786
	CA*F3636*6D*+TXV	G*EC960402BNA*	23,000	18,400	15.0	12.5	22,200	18,200	22,800	8.2	13,000	820	7995787
	CA*F3636*6D*+TXV	G*EC960603BNA*	23,000	18,400	15.0	12.5	22,200	18,200	22,800	8.2	13,000	840	7995788
	CA*F3636*6D*+TXV	G*EC960803BNA*	23,000	18,400	15.0	12.5	22,200	18,200	22,800	8.2	13,000	770	7995789
	CA*F3636*6D*+TXV	G*VC80604B*B*	23,000	18,400	15.0	12.5	22,200	18,200	22,800	8.2	13,000	850	7995790
	CA*F3636*6D*+TXV	G*VC960403BNA*	23,000	18,400	14.5	12.0	22,200	18,200	23,200	8.2	13,000	800	7995791
	CA*F3636*6D*+TXV	G*VC960603BNA*	23,000	18,400	14.5	12.0	22,200	18,200	23,200	8.2	13,000	810	7995792
	CA*F3636*6D*+TXV	G*VC960803BNA*	23,000	18,400	14.5	12.0	22,200	18,200	23,200	8.2	13,000	810	7995793

See Notes on Page 40.

Outdoor Unit	Indoor Units		Cooling Ratings ^				TVA Ratings [3]		Heating Ratings ^			CFM	AHRI #
	Coils/Air Handlers	Furnaces	Total	Sens.	SEER [1]	EER [2]	Total	Sens.	HI [4]	HSPF [5]	Low [6]		
VSZ14 0241A* (Contd.)	CHPF3636B6C*	G*EC960403BNA*	22,800	18,300	14.0	12.0	22,000	18,400	22,400	8.2	13,000	725	10338370
	CHPF3636B6C*	G*VC80603B*B*	23,200	19,200	14.5	12.0	22,400	18,700	22,800	8.2	13,000	750	9924331
	CHPF3636B6C*	G*VC80803B*B*	23,200	19,200	14.5	12.0	22,400	18,700	22,800	8.2	13,000	750	9924335
	CHPF3636B6C*	A*EC960302BNA*	23,000	18,400	14.5	12.0	22,200	18,200	22,800	8.2	13,000	800	7995833
	CHPF3636B6C*	A*EC960402BNA*	23,000	18,400	14.5	12.0	22,200	18,200	22,800	8.2	13,000	820	7995834
	CHPF3636B6C*	A*EC960603BNA*	23,000	18,400	14.5	12.0	22,200	18,200	22,800	8.2	13,000	840	7995835
	CHPF3636B6C*	A*EC960803BNA*	23,000	18,400	14.5	12.0	22,200	18,200	22,800	8.2	13,000	770	7995836
	CHPF3636B6C*	A*EH800603B*A*	23,200	18,600	14.5	12.0	22,400	18,400	23,200	8.2	13,000	860	7995837
	CHPF3636B6C*	A*VC80604B*B*	23,000	18,400	14.5	12.0	22,200	18,200	22,800	8.2	13,000	850	7995838
	CHPF3636B6C*	A*VC960403BNA*	23,000	18,400	14.5	12.0	22,200	18,200	23,200	8.2	13,000	800	7995839
	CHPF3636B6C*	A*VC960603BNA*	23,000	18,400	14.5	12.0	22,200	18,200	23,200	8.2	13,000	810	7995840
	CHPF3636B6C*	A*VC960803BNA*	23,000	18,400	14.5	12.0	22,200	18,200	23,200	8.2	13,000	810	7995841
	CHPF3636B6C*	G*E80603B*B*	23,200	18,600	14.5	12.0	22,400	18,400	23,200	8.2	13,000	860	7995842
	CHPF3636B6C*	G*EC960302BNA*	23,000	18,400	14.5	12.0	22,200	18,200	22,800	8.2	13,000	800	7995843
	CHPF3636B6C*	G*EC960402BNA*	23,000	18,400	14.5	12.0	22,200	18,200	22,800	8.2	13,000	820	7995844
	CHPF3636B6C*	G*EC960603BNA*	23,000	18,400	14.5	12.0	22,200	18,200	22,800	8.2	13,000	840	7995845
	CHPF3636B6C*	G*EC960803BNA*	23,000	18,400	14.5	12.0	22,200	18,200	22,800	8.2	13,000	770	7995846
	CHPF3636B6C*	G*VC80604B*B*	23,000	18,400	14.5	12.0	22,200	18,200	22,800	8.2	13,000	850	7995847
	CHPF3636B6C*	G*VC960403BNA*	23,000	18,400	14.5	12.0	22,200	18,200	23,200	8.2	13,000	800	7995848
	CHPF3636B6C*	G*VC960603BNA*	23,000	18,400	14.5	12.0	22,200	18,200	23,200	8.2	13,000	810	7995849
	CHPF3636B6C*	G*VC960803BNA*	23,000	18,400	14.5	12.0	22,200	18,200	23,200	8.2	13,000	810	7995850
	CHPF3636B6C*+EEP+TXV		23,200	18,600	14.0	11.5	22,400	18,400	23,200	8.2	13,000	870	7995812
	CHPF3636B6C*+MBVC1200**-1A*		23,600	18,900	14.5	12.0	22,800	18,700	23,200	8.5	13,000	855	7995813
	CHPF3636B6C*+MBVC1200**-1A*+TXV		23,600	18,900	15.0	12.5	22,800	18,700	23,200	8.5	13,000	855	7995814
	CHPF3636B6C*+TXV	G*EC960403BNA*	22,800	18,300	14.5	12.0	22,000	18,400	22,400	8.2	13,000	725	10338371
	CHPF3636B6C*+TXV	G*VC80603B*B*	23,200	19,200	14.5	12.0	22,400	18,700	22,800	8.2	13,000	750	9924332
	CHPF3636B6C*+TXV	G*VC80803B*B*	23,200	19,200	14.5	12.0	22,400	18,700	22,800	8.2	13,000	750	9924336
	CHPF3636B6C*+TXV	A*EC960302BNA*	23,000	18,400	15.0	12.5	22,200	18,200	22,800	8.2	13,000	800	7995815
	CHPF3636B6C*+TXV	A*EC960402BNA*	23,000	18,400	15.0	12.5	22,200	18,200	22,800	8.2	13,000	820	7995816
	CHPF3636B6C*+TXV	A*EC960603BNA*	23,000	18,400	15.0	12.5	22,200	18,200	22,800	8.2	13,000	840	7995817
	CHPF3636B6C*+TXV	A*EC960803BNA*	23,000	18,400	15.0	12.5	22,200	18,200	22,800	8.2	13,000	770	7995818
	CHPF3636B6C*+TXV	A*EH800603B*A*	23,200	18,600	14.5	12.0	22,400	18,400	23,200	8.2	13,000	860	7995819
	CHPF3636B6C*+TXV	A*VC80604B*B*	23,000	18,400	15.0	12.5	22,200	18,200	22,800	8.2	13,000	850	7995820
	CHPF3636B6C*+TXV	A*VC960403BNA*	23,000	18,400	14.5	12.0	22,200	18,200	23,200	8.2	13,000	800	7995821
	CHPF3636B6C*+TXV	A*VC960603BNA*	23,000	18,400	14.5	12.0	22,200	18,200	23,200	8.2	13,000	810	7995822
	CHPF3636B6C*+TXV	A*VC960803BNA*	23,000	18,400	14.5	12.0	22,200	18,200	23,200	8.2	13,000	810	7995823
	CHPF3636B6C*+TXV	G*E80603B*B*	23,200	18,600	14.5	12.0	22,400	18,400	23,200	8.2	13,000	860	7995824
	CHPF3636B6C*+TXV	G*EC960302BNA*	23,000	18,400	15.0	12.5	22,200	18,200	22,800	8.2	13,000	800	7995825
	CHPF3636B6C*+TXV	G*EC960402BNA*	23,000	18,400	15.0	12.5	22,200	18,200	22,800	8.2	13,000	820	7995826
	CHPF3636B6C*+TXV	G*EC960603BNA*	23,000	18,400	15.0	12.5	22,200	18,200	22,800	8.2	13,000	840	7995827
	CHPF3636B6C*+TXV	G*EC960803BNA*	23,000	18,400	15.0	12.5	22,200	18,200	22,800	8.2	13,000	770	7995828
	CHPF3636B6C*+TXV	G*VC80604B*B*	23,000	18,400	15.0	12.5	22,200	18,200	22,800	8.2	13,000	850	7995829
	CHPF3636B6C*+TXV	G*VC960403BNA*	23,000	18,400	14.5	12.0	22,200	18,200	23,200	8.2	13,000	800	7995830
	CHPF3636B6C*+TXV	G*VC960603BNA*	23,000	18,400	14.5	12.0	22,200	18,200	23,200	8.2	13,000	810	7995831
	CHPF3636B6C*+TXV	G*VC960803BNA*	23,000	18,400	14.5	12.0	22,200	18,200	23,200	8.2	13,000	810	7995832
VSZ14 0301A*	ARUF29B14A*+TXV		27,600	20,400	14.0	11.5	26,600	20,000	28,400	8.2	16,200	870	7995851
	ARUF31B14A*		28,000	20,800	14.0	12.0	27,000	20,200	27,800	8.2	16,200	910	7995852
	ASPT35B14A*		27,200	20,000	14.0	11.5	26,220	19,530	28,400	8.2	16,200	920	10341560
	ASPT36C14A*		27,800	20,600	14.5	12.0	26,800	20,000	28,000	8.5	16,000	960	8200992
	ASPT37B14A*		28,000	20,800	14.5	12.0	27,000	20,200	28,000	8.2	16,000	945	8242656
	ASPT37C14A*		28,400	21,000	15.0	12.5	27,400	20,600	28,000	8.5	16,000	1,045	8242659

See Notes on Page 40.

Outdoor Unit	Indoor Units		Cooling Ratings ^				TVA Ratings [3]		Heating Ratings ^			CFM	AHRI #
	Coils/Air Handlers	Furnaces	Total	Sens.	SEER [1]	EER [2]	Total	Sens.	Hi [4]	HSPF [5]	Low [6]		
VSZ14 0301A* (Contd.)	AVPTC30C14A*		27,800	20,600	15.0	12.5	26,800	20,000	28,000	8.5	16,000	860	7995853
	AVPTC35B14A*		27,200	20,000	14.0	11.5	26,220	19,530	28,400	8.2	16,200	950	10341561
	AWUF31XX16A*		27,800	20,600	14.0	12.0	26,800	20,000	28,000	8.2	17,000	980	7995854
	AWUF31XX16A*+TXV		27,800	20,600	14.5	12.0	26,800	20,000	28,000	8.2	17,000	980	7995855
	CA*F3137*6A*	G*VC80603B*B*	28,400	21,600	14.0	11.5	27,400	21,200	28,000	8.2	16,400	950	9924339
	CA*F3137*6A*	G*VC80803B*B*	28,400	21,600	14.0	11.5	27,400	21,200	28,000	8.2	16,400	950	9924345
	CA*F3137*6A*	A*EC960603BNA*	28,400	21,000	14.0	11.5	27,400	20,600	28,200	8.5	16,400	1,020	7995871
	CA*F3137*6A*	A*EC960803BNA*	28,400	21,000	14.0	11.5	27,400	20,600	28,200	8.5	16,600	990	7995872
	CA*F3137*6A*	A*EH800603B*A*	28,400	21,000	14.0	11.5	27,400	20,600	28,000	8.2	16,400	860	7995873
	CA*F3137*6A*	A*VC80604B*B*	28,400	21,000	14.0	11.5	27,400	20,600	28,200	8.5	16,600	995	7995874
	CA*F3137*6A*	A*VC960403BNA*	28,400	21,000	14.5	11.5	27,400	20,600	28,200	8.5	16,600	1,000	7995875
	CA*F3137*6A*	A*VC960603BNA*	28,400	21,000	14.5	11.5	27,400	20,600	28,200	8.5	16,400	910	7995876
	CA*F3137*6A*	A*VC960803BNA*	28,400	21,000	14.5	11.5	27,400	20,600	28,200	8.5	16,400	920	7995877
	CA*F3137*6A*	G*E80603B*B*	28,400	21,000	14.0	11.5	27,400	20,600	28,000	8.2	16,400	860	7995878
	CA*F3137*6A*	G*EC960603BNA*	28,400	21,000	14.0	11.5	27,400	20,600	28,200	8.5	16,400	1,020	7995879
	CA*F3137*6A*	G*EC960803BNA*	28,400	21,000	14.0	11.5	27,400	20,600	28,200	8.5	16,600	990	7995880
	CA*F3137*6A*	G*VC80604B*B*	28,400	21,000	14.0	11.5	27,400	20,600	28,200	8.5	16,600	995	7995881
	CA*F3137*6A*	G*VC960403BNA*	28,400	21,000	14.5	11.5	27,400	20,600	28,200	8.5	16,600	1,000	7995882
	CA*F3137*6A*	G*VC960603BNA*	28,400	21,000	14.5	11.5	27,400	20,600	28,200	8.5	16,400	910	7995883
	CA*F3137*6A*	G*VC960803BNA*	28,400	21,000	14.5	11.5	27,400	20,600	28,200	8.5	16,400	920	7995884
	CA*F3137*6A*+EEP+TXV		28,000	20,800	14.0	11.5	27,000	20,200	28,000	8.2	16,600	870	7995856
	CA*F3137*6A*+TXV	G*VC80603B*B*	28,400	21,600	14.5	12.0	27,400	21,200	28,000	8.2	16,400	950	9924340
	CA*F3137*6A*+TXV	G*VC80803B*B*	28,400	21,600	14.5	12.0	27,400	21,200	28,000	8.2	16,400	950	9924346
	CA*F3137*6A*+TXV	A*EC960603BNA*	28,400	21,000	14.5	12.0	27,400	20,600	28,200	8.5	16,600	1,020	7995857
	CA*F3137*6A*+TXV	A*EC960803BNA*	28,400	21,000	14.5	12.0	27,400	20,600	28,200	8.5	16,600	990	7995858
	CA*F3137*6A*+TXV	A*EH800603B*A*	28,400	21,000	14.5	12.0	27,400	20,600	28,000	8.2	16,400	860	7995859
	CA*F3137*6A*+TXV	A*VC80604B*B*	28,400	21,000	14.5	12.0	27,400	20,600	28,200	8.5	16,600	995	7995860
	CA*F3137*6A*+TXV	A*VC960403BNA*	28,400	21,000	15.0	12.0	27,400	20,600	28,200	8.5	16,600	1,000	7995861
	CA*F3137*6A*+TXV	A*VC960603BNA*	28,400	21,000	15.0	12.0	27,400	20,600	28,200	8.5	16,400	910	7995862
	CA*F3137*6A*+TXV	A*VC960803BNA*	28,400	21,000	15.0	12.0	27,400	20,600	28,200	8.5	16,400	920	7995863
	CA*F3137*6A*+TXV	G*E80603B*B*	28,400	21,000	14.5	12.0	27,400	20,600	28,000	8.2	16,400	860	7995864
	CA*F3137*6A*+TXV	G*EC960603BNA*	28,400	21,000	14.5	12.0	27,400	20,600	28,200	8.5	16,600	1,020	7995865
	CA*F3137*6A*+TXV	G*EC960803BNA*	28,400	21,000	14.5	12.0	27,400	20,600	28,200	8.5	16,600	990	7995866
	CA*F3137*6A*+TXV	G*VC80604B*B*	28,400	21,000	14.5	12.0	27,400	20,600	28,200	8.5	16,600	995	7995867
	CA*F3137*6A*+TXV	G*VC960403BNA*	28,400	21,000	15.0	12.0	27,400	20,600	28,200	8.5	16,600	1,000	7995868
	CA*F3137*6A*+TXV	G*VC960603BNA*	28,400	21,000	15.0	12.0	27,400	20,600	28,200	8.5	16,400	910	7995869
	CA*F3137*6A*+TXV	G*VC960803BNA*	28,400	21,000	15.0	12.0	27,400	20,600	28,200	8.5	16,400	920	7995870
	CA*F3642*6D*+MBVC1200**-1A*		28,000	20,800	14.5	12.0	27,000	20,200	28,000	8.5	16,200	855	7995885
	CA*F3642*6D*+MBVC1200**-1A*+TXV		28,000	20,800	15.0	12.5	27,000	20,200	28,000	8.5	16,200	855	7995886
	CA*F3642*6D*+MBVC1600**-1A*		28,000	20,800	14.5	12.0	27,000	20,200	28,000	8.5	16,200	855	7995887
	CA*F3642*6D*+MBVC1600**-1A*+TXV		28,000	20,800	15.0	12.5	27,000	20,200	28,000	8.5	16,200	855	7995888
	CA*F3743*6D*	G*VC80805D*B*	28,200	21,400	14.5	12.0	27,200	21,000	28,000	8.5	16,200	1,000	9924353
	CA*F3743*6D*	A*VC80805C*B*	28,200	20,800	14.5	12.0	27,200	20,400	28,000	8.5	16,200	880	7995896
	CA*F3743*6D*	A*VC960804CNA*	28,200	20,800	14.5	12.0	27,200	20,400	28,000	8.5	16,200	940	7995897
	CA*F3743*6D*	A*VC961005CNA*	28,200	20,800	14.5	12.0	27,200	20,400	28,000	8.5	16,200	865	7995898
	CA*F3743*6D*	G*VC80805C*B*	28,200	20,800	14.5	12.0	27,200	20,400	28,000	8.5	16,200	880	7995899
	CA*F3743*6D*	G*VC960804CNA*	28,200	20,800	14.5	12.0	27,200	20,400	28,000	8.5	16,200	940	7995900
	CA*F3743*6D*	G*VC961005CNA*	28,200	20,800	14.5	12.0	27,200	20,400	28,000	8.5	16,200	865	7995901
	CA*F3743*6D*+TXV	G*VC80805D*B*	28,200	21,400	15.0	12.5	27,200	21,000	28,000	8.5	16,200	1,000	9924354
	CA*F3743*6D*+TXV		28,000	20,800	14.0	11.5	27,000	20,200	28,000	8.2	16,600	870	7995889
	CA*F3743*6D*+TXV	A*VC80805C*B*	28,200	20,800	15.0	12.5	27,200	20,400	28,000	8.5	16,200	880	7995890

See Notes on Page 40.

Outdoor Unit	Indoor Units		Cooling Ratings ^				TVA Ratings [3]		Heating Ratings ^			CFM	AHRI #
	Coils/Air Handlers	Furnaces	Total	Sens.	SEER [1]	EER [2]	Total	Sens.	HI [4]	HSPF [5]	Low [6]		
VSZ14 0301A* (Contd.	CA*F3743*6D*+TXV	A*VC960804CNA*	28,200	20,800	15.0	12.5	27,200	20,400	28,000	8.5	16,200	940	7995891
	CA*F3743*6D*+TXV	A*VC961005CNA*	28,200	20,800	15.0	12.5	27,200	20,400	28,000	8.5	16,200	865	7995892
	CA*F3743*6D*+TXV	G*VC80805C*B*	28,200	20,800	15.0	12.5	27,200	20,400	28,000	8.5	16,200	880	7995893
	CA*F3743*6D*+TXV	G*VC960804CNA*	28,200	20,800	15.0	12.5	27,200	20,400	28,000	8.5	16,200	940	7995894
	CA*F3743*6D*+TXV	G*VC961005CNA*	28,200	20,800	15.0	12.5	27,200	20,400	28,000	8.5	16,200	865	7995895
	CHPF3636B6C*	G*VC80603B*B*	28,000	21,400	14.0	11.5	27,000	20,800	28,000	8.2	16,200	950	9924341
	CHPF3636B6C*	G*VC80803B*B*	28,000	21,400	14.0	11.5	27,000	20,800	28,000	8.2	16,200	950	9924347
	CHPF3636B6C*	A*EC960603BNA*	28,400	21,000	14.0	11.5	27,400	20,600	28,400	8.5	16,600	1,020	7995916
	CHPF3636B6C*	A*EC960803BNA*	28,400	21,000	14.0	11.5	27,400	20,600	28,400	8.5	16,600	990	7995917
	CHPF3636B6C*	A*EH800603B*A*	28,000	20,800	14.0	11.5	27,000	20,200	28,000	8.2	16,200	860	7995918
	CHPF3636B6C*	A*VC80604B*B*	28,400	21,000	14.0	11.5	27,400	20,600	28,400	8.5	16,600	995	7995919
	CHPF3636B6C*	A*VC960403BNA*	28,400	21,000	14.0	11.5	27,400	20,600	28,400	8.5	16,600	1,000	7995920
	CHPF3636B6C*	A*VC960603BNA*	28,200	20,800	14.0	11.5	27,200	20,400	28,400	8.5	16,400	910	7995921
	CHPF3636B6C*	A*VC960803BNA*	28,200	20,800	14.0	11.5	27,200	20,400	28,400	8.5	16,400	920	7995922
	CHPF3636B6C*	G*E80603B*B*	28,000	20,800	14.0	11.5	27,000	20,200	28,000	8.2	16,200	860	7995923
	CHPF3636B6C*	G*EC960603BNA*	28,400	21,000	14.0	11.5	27,400	20,600	28,400	8.5	16,600	1,020	7995924
	CHPF3636B6C*	G*EC960803BNA*	28,400	21,000	14.0	11.5	27,400	20,600	28,400	8.5	16,600	990	7995925
	CHPF3636B6C*	G*VC80604B*B*	28,400	21,000	14.0	11.5	27,400	20,600	28,400	8.5	16,600	995	7995926
	CHPF3636B6C*	G*VC960403BNA*	28,400	21,000	14.0	11.5	27,400	20,600	28,400	8.5	16,600	1,000	7995927
	CHPF3636B6C*	G*VC960603BNA*	28,200	20,800	14.0	11.5	27,200	20,400	28,400	8.5	16,400	910	7995928
	CHPF3636B6C*	G*VC960803BNA*	28,200	20,800	14.0	11.5	27,200	20,400	28,400	8.5	16,400	920	7995929
	CHPF3636B6C*+TXV	G*VC80603B*B*	28,000	21,400	14.5	12.0	27,000	20,800	28,000	8.2	16,200	950	9924342
	CHPF3636B6C*+TXV	G*VC80803B*B*	28,000	21,400	14.5	12.0	27,000	20,800	28,000	8.2	16,200	950	9924348
	CHPF3636B6C*+TXV	A*EC960603BNA*	28,400	21,000	14.5	12.0	27,400	20,600	28,400	8.5	16,600	1,020	7995902
	CHPF3636B6C*+TXV	A*EC960803BNA*	28,400	21,000	14.5	12.0	27,400	20,600	28,400	8.5	16,600	990	7995903
	CHPF3636B6C*+TXV	A*EH800603B*A*	28,000	20,800	14.5	12.0	27,000	20,200	28,000	8.2	16,200	860	7995904
	CHPF3636B6C*+TXV	A*VC80604B*B*	28,400	21,000	14.5	12.0	27,400	20,600	28,400	8.5	16,600	995	7995905
	CHPF3636B6C*+TXV	A*VC960403BNA*	28,400	21,000	14.5	12.0	27,400	20,600	28,400	8.5	16,600	1,000	7995906
	CHPF3636B6C*+TXV	A*VC960603BNA*	28,200	20,800	14.5	12.0	27,200	20,400	28,400	8.5	16,400	910	7995907
	CHPF3636B6C*+TXV	A*VC960803BNA*	28,200	20,800	14.5	12.0	27,200	20,400	28,400	8.5	16,400	920	7995908
	CHPF3636B6C*+TXV	G*E80603B*B*	28,000	20,800	14.5	12.0	27,000	20,200	28,000	8.2	16,200	860	7995909
	CHPF3636B6C*+TXV	G*EC960603BNA*	28,400	21,000	14.5	12.0	27,400	20,600	28,400	8.5	16,600	1,020	7995910
	CHPF3636B6C*+TXV	G*EC960803BNA*	28,400	21,000	14.5	12.0	27,400	20,600	28,400	8.5	16,600	990	7995911
	CHPF3636B6C*+TXV	G*VC80604B*B*	28,400	21,000	14.5	12.0	27,400	20,600	28,400	8.5	16,600	995	7995912
	CHPF3636B6C*+TXV	G*VC960403BNA*	28,400	21,000	14.5	12.0	27,400	20,600	28,400	8.5	16,600	1,000	7995913
	CHPF3636B6C*+TXV	G*VC960603BNA*	28,200	20,800	14.5	12.0	27,200	20,400	28,400	8.5	16,400	910	7995914
	CHPF3636B6C*+TXV	G*VC960803BNA*	28,200	20,800	14.5	12.0	27,200	20,400	28,400	8.5	16,400	920	7995915
	CHPF3642C6C*	G*VC80805D*B*	28,000	21,400	14.5	12.0	27,000	20,800	28,000	8.2	16,200	1,000	9924355
	CHPF3642C6C*	A*VC80805C*B*	28,000	20,800	14.5	12.0	27,000	20,200	28,000	8.2	16,200	880	7995940
	CHPF3642C6C*	A*VC960804CNA*	28,200	20,800	14.5	12.0	27,200	20,400	28,400	8.5	16,400	940	7995941
	CHPF3642C6C*	A*VC961005CNA*	28,000	20,800	14.5	12.0	27,000	20,200	28,000	8.2	16,200	865	7995942
	CHPF3642C6C*	G*VC80805C*B*	28,000	20,800	14.5	12.0	27,000	20,200	28,000	8.2	16,200	880	7995943
	CHPF3642C6C*	G*VC960804CNA*	28,200	20,800	14.5	12.0	27,200	20,400	28,400	8.5	16,400	940	7995944
	CHPF3642C6C*	G*VC961005CNA*	28,000	20,800	14.5	12.0	27,000	20,200	28,000	8.2	16,200	865	7995945
	CHPF3642C6C*+MBVC1200**-1A*		28,000	20,800	14.5	12.0	27,000	20,200	28,000	8.5	16,200	855	7995930
	CHPF3642C6C*+MBVC1200**-1A*+TXV		28,000	20,800	15.0	12.5	27,000	20,200	28,000	8.5	16,200	855	7995931
	CHPF3642C6C*+MBVC1600**-1A*		28,000	20,800	14.5	12.0	27,000	20,200	28,000	8.5	16,200	855	7995932
	CHPF3642C6C*+MBVC1600**-1A*+TXV		28,000	20,800	15.0	12.5	27,000	20,200	28,000	8.5	16,200	855	7995933
	CHPF3642C6C*+TXV	G*VC80805D*B*	28,000	21,400	15.0	12.5	27,000	20,800	28,000	8.2	16,200	1,000	9924356
	CHPF3642C6C*+TXV	A*VC80805C*B*	28,000	20,800	15.0	12.5	27,000	20,200	28,000	8.2	16,200	880	7995934
	CHPF3642C6C*+TXV	A*VC960804CNA*	28,200	20,800	15.0	12.5	27,200	20,400	28,400	8.5	16,400	940	7995935

See Notes on Page 40.

Outdoor Unit	Indoor Units		Cooling Ratings ^				TVA Ratings [3]		Heating Ratings ^			CFM	AHRI #
	Coils/Air Handlers	Furnaces	Total	Sens.	SEER [1]	EER [2]	Total	Sens.	Hi [4]	HSPF [5]	Low [6]		
VSZ14 0301A* (Contd.	CHPF3642C6C*+TXV	A*VC961005CNA*	28,000	20,800	15.0	12.5	27,000	20,200	28,000	8.2	16,200	865	7995936
	CHPF3642C6C*+TXV	G*VC80805C*B*	28,000	20,800	15.0	12.5	27,000	20,200	28,000	8.2	16,200	880	7995937
	CHPF3642C6C*+TXV	G*VC960804CNA*	28,200	20,800	15.0	12.5	27,200	20,400	28,400	8.5	16,400	940	7995938
	CHPF3642C6C*+TXV	G*VC961005CNA*	28,000	20,800	15.0	12.5	27,000	20,200	28,000	8.2	16,200	865	7995939
	CHPF3743C6B*+EEP+TXV		28,000	20,800	14.0	11.5	27,000	20,200	28,000	8.2	17,000	870	7995946
	CSCF3642N6D*	G*VC80603B*B*	28,400	21,600	14.0	11.5	27,400	21,200	28,200	8.5	16,200	950	9924343
	CSCF3642N6D*	G*VC80803B*B*	28,400	21,600	14.0	11.5	27,400	21,200	28,200	8.5	16,200	950	9924349
	CSCF3642N6D*	G*VC80804C*B*	28,400	21,600	14.0	11.5	27,400	21,200	28,200	8.5	16,600	950	9924351
	CSCF3642N6D*	G*VC80805D*B*	28,400	21,600	14.5	12.0	27,400	21,200	28,200	8.5	16,200	1,000	9924357
	CSCF3642N6D*	A*EC960603BNA*	28,400	21,000	14.0	11.5	27,400	20,600	28,200	8.5	16,600	1,020	7995972
	CSCF3642N6D*	A*EC960803BNA*	28,400	21,000	14.0	11.5	27,400	20,600	28,200	8.5	16,600	990	7995973
	CSCF3642N6D*	A*EH800603B*A*	28,400	21,000	14.0	11.5	27,400	20,600	28,200	8.5	16,200	860	7995974
	CSCF3642N6D*	A*VC80604B*B*	28,400	21,000	14.0	11.5	27,400	20,600	28,200	8.5	16,600	995	7995975
	CSCF3642N6D*	A*VC80805C*B*	28,400	21,000	14.5	12.0	27,400	20,600	28,200	8.5	16,200	880	7995976
	CSCF3642N6D*	A*VC960403BNA*	28,400	21,000	14.0	11.5	27,400	20,600	28,200	8.5	16,600	1,000	7995977
	CSCF3642N6D*	A*VC960603BNA*	28,400	21,000	14.0	11.5	27,400	20,600	28,200	8.5	16,400	910	7995978
	CSCF3642N6D*	A*VC960803BNA*	28,400	21,000	14.0	11.5	27,400	20,600	28,200	8.5	16,400	920	7995979
	CSCF3642N6D*	A*VC960804CNA*	28,400	21,000	14.5	12.0	27,400	20,600	28,200	8.5	16,400	940	7995980
	CSCF3642N6D*	A*VC961005CNA*	28,400	21,000	14.5	12.0	27,400	20,600	28,200	8.5	16,200	865	7995981
	CSCF3642N6D*	G*E80603B*B*	28,400	21,000	14.0	11.5	27,400	20,600	28,200	8.5	16,200	860	7995982
	CSCF3642N6D*	G*EC960603BNA*	28,400	21,000	14.0	11.5	27,400	20,600	28,200	8.5	16,600	1,020	7995983
	CSCF3642N6D*	G*EC960803BNA*	28,400	21,000	14.0	11.5	27,400	20,600	28,200	8.5	16,600	990	7995984
	CSCF3642N6D*	G*VC80604B*B*	28,400	21,000	14.0	11.5	27,400	20,600	28,200	8.5	16,600	995	7995985
	CSCF3642N6D*	G*VC80805C*B*	28,400	21,000	14.5	12.0	27,400	20,600	28,200	8.5	16,200	880	7995986
	CSCF3642N6D*	G*VC960403BNA*	28,400	21,000	14.0	11.5	27,400	20,600	28,200	8.5	16,600	1,000	7995987
	CSCF3642N6D*	G*VC960603BNA*	28,400	21,000	14.0	11.5	27,400	20,600	28,200	8.5	16,400	910	7995988
	CSCF3642N6D*	G*VC960803BNA*	28,400	21,000	14.0	11.5	27,400	20,600	28,200	8.5	16,400	920	7995989
	CSCF3642N6D*	G*VC960804CNA*	28,400	21,000	14.5	12.0	27,400	20,600	28,200	8.5	16,400	940	7995990
	CSCF3642N6D*	G*VC961005CNA*	28,400	21,000	14.5	12.0	27,400	20,600	28,200	8.5	16,200	865	7995991
	CSCF3642N6D*+EEP+TXV		28,000	20,800	14.0	11.5	27,000	20,200	28,800	8.2	17,000	870	7995947
	CSCF3642N6D*+MBVC1200**-1A*		28,400	21,000	14.5	12.0	27,400	20,600	28,200	8.5	16,200	855	7995948
	CSCF3642N6D*+MBVC1200**-1A*+TXV		28,400	21,000	15.0	12.5	27,400	20,600	28,200	8.5	16,200	855	7995949
	CSCF3642N6D*+MBVC1600**-1A*		28,400	21,000	14.5	12.0	27,400	20,600	28,200	8.5	16,200	855	7995950
	CSCF3642N6D*+MBVC1600**-1A*+TXV		28,400	21,000	15.0	12.5	27,400	20,600	28,200	8.5	16,200	855	7995951
	CSCF3642N6D*+TXV	G*VC80603B*B*	28,400	21,600	14.5	12.0	27,400	21,200	28,200	8.5	16,200	950	9924344
	CSCF3642N6D*+TXV	G*VC80803B*B*	28,400	21,600	14.5	12.0	27,400	21,200	28,200	8.5	16,200	950	9924350
	CSCF3642N6D*+TXV	G*VC80804C*B*	28,400	21,600	14.5	12.0	27,400	21,200	28,200	8.5	16,600	950	9924352
	CSCF3642N6D*+TXV	G*VC80805D*B*	28,400	21,600	15.0	12.5	27,400	21,200	28,200	8.5	16,200	1,000	9924358
	CSCF3642N6D*+TXV	A*EC960603BNA*	28,400	21,000	14.5	12.0	27,400	20,600	28,200	8.5	16,600	1,020	7995952
	CSCF3642N6D*+TXV	A*EC960803BNA*	28,400	21,000	14.5	12.0	27,400	20,600	28,200	8.5	16,600	990	7995953
	CSCF3642N6D*+TXV	A*EH800603B*A*	28,400	21,000	14.5	12.0	27,400	20,600	28,200	8.5	16,200	860	7995954
	CSCF3642N6D*+TXV	A*VC80604B*B*	28,400	21,000	14.5	12.0	27,400	20,600	28,200	8.5	16,600	995	7995955
	CSCF3642N6D*+TXV	A*VC80805C*B*	28,400	21,000	15.0	12.5	27,400	20,600	28,200	8.5	16,200	880	7995956
	CSCF3642N6D*+TXV	A*VC960403BNA*	28,400	21,000	14.5	12.0	27,400	20,600	28,200	8.5	16,600	1,000	7995957
	CSCF3642N6D*+TXV	A*VC960603BNA*	28,400	21,000	14.5	12.0	27,400	20,600	28,200	8.5	16,400	910	7995958
	CSCF3642N6D*+TXV	A*VC960803BNA*	28,400	21,000	14.5	12.0	27,400	20,600	28,200	8.5	16,400	920	7995959
	CSCF3642N6D*+TXV	A*VC960804CNA*	28,400	21,000	15.0	12.5	27,400	20,600	28,200	8.5	16,400	940	7995960
	CSCF3642N6D*+TXV	A*VC961005CNA*	28,400	21,000	15.0	12.5	27,400	20,600	28,200	8.5	16,200	865	7995961
	CSCF3642N6D*+TXV	G*E80603B*B*	28,400	21,000	14.5	12.0	27,400	20,600	28,200	8.5	16,200	860	7995962
	CSCF3642N6D*+TXV	G*EC960603BNA*	28,400	21,000	14.5	12.0	27,400	20,600	28,200	8.5	16,600	1,020	7995963
	CSCF3642N6D*+TXV	G*EC960803BNA*	28,400	21,000	14.5	12.0	27,400	20,600	28,200	8.5	16,600	990	7995964

See Notes on Page 40.

Outdoor Unit	Indoor Units		Cooling Ratings ^				TVA Ratings [3]		Heating Ratings ^			CFM	AHRI #
	Coils/Air Handlers	Furnaces	Total	Sens.	SEER [1]	EER [2]	Total	Sens.	HI [4]	HSPF [5]	Low [6]		
VSZ14 0301A* (Contd.	CSCF3642N6D*+TXV	G*VC80604B*B*	28,400	21,000	14.5	12.0	27,400	20,600	28,200	8.5	16,600	995	7995965
	CSCF3642N6D*+TXV	G*VC80805C*B*	28,400	21,000	15.0	12.5	27,400	20,600	28,200	8.5	16,200	880	7995966
	CSCF3642N6D*+TXV	G*VC960403BNA*	28,400	21,000	14.5	12.0	27,400	20,600	28,200	8.5	16,600	1,000	7995967
	CSCF3642N6D*+TXV	G*VC960603BNA*	28,400	21,000	14.5	12.0	27,400	20,600	28,200	8.5	16,400	910	7995968
	CSCF3642N6D*+TXV	G*VC960803BNA*	28,400	21,000	14.5	12.0	27,400	20,600	28,200	8.5	16,400	920	7995969
	CSCF3642N6D*+TXV	G*VC960804CNA*	28,400	21,000	15.0	12.5	27,400	20,600	28,200	8.5	16,400	940	7995970
	CSCF3642N6D*+TXV	G*VC961005CNA*	28,400	21,000	15.0	12.5	27,400	20,600	28,200	8.5	16,200	865	7995971
VSZ14 0361A*	ARUF37C14A*+TXV		34,600	25,600	14.0	11.5	33,400	25,000	32,800	8.2	19,000	1,010	7995992
	ARUF37D14A*		34,400	25,400	14.0	11.5	33,200	24,800	32,800	8.2	20,000	1,070	7995993
	ASPT37B14A*		34,000	25,200	14.0	12.0	32,800	24,600	32,600	8.2	20,000	1,120	8242660
	ASPT37C14A*		34,600	25,600	14.5	12.0	33,400	25,000	32,600	8.5	20,000	1,180	8242662
	ASPT47C14B*		34,400	25,400	14.5	12.0	33,200	24,800	32,600	8.5	20,000	1,075	201817173
	ASPT47D14A*		34,800	25,800	15.0	12.5	33,600	25,200	32,600	8.5	20,000	1,180	8242665
	AVPTC36C14A*		34,400	25,400	14.0	11.5	33,200	24,800	32,600	8.2	20,000	1,150	7995994
	AVPTC37C14A*		34,400	25,400	14.5	12.0	33,200	24,800	32,600	8.5	20,000	1,130	9119181
	AVPTC37D14A*		34,400	25,400	14.5	12.0	33,200	24,800	32,600	8.5	20,000	1,145	9119182
	AVPTC49D14A*		34,600	25,600	15.0	12.5	33,400	25,000	32,600	8.5	20,000	1,075	9119183
	CA*F3137*6A*+MBVC1200**-1A*+TXV		34,600	25,600	14.0	11.5	33,400	25,000	32,000	8.2	19,000	1,050	9119189
	CA*F3137*6A*+TXV	G*VC80603B*B*	34,600	25,800	14.0	11.5	33,400	25,200	32,200	8.2	19,600	1,100	9924359
	CA*F3137*6A*+TXV	G*VC80803B*B*	34,600	25,800	14.0	11.5	33,400	25,200	32,200	8.2	19,600	1,150	9924360
	CA*F3137*6A*+TXV	A*EC960603BNA*	34,600	25,600	14.0	11.5	33,400	25,000	32,000	8.2	19,600	1,020	7995995
	CA*F3137*6A*+TXV	A*EC960803BNA*	34,600	25,600	14.0	11.5	33,400	25,000	32,000	8.2	19,600	1,010	7995996
	CA*F3137*6A*+TXV	A*EH800603B*A*	34,600	25,600	14.0	11.5	33,400	25,000	32,200	8.2	19,600	1,100	7995997
	CA*F3137*6A*+TXV	A*VC80604B*B*	34,600	25,600	14.0	11.5	33,400	25,000	32,000	8.2	19,600	1,100	7995998
	CA*F3137*6A*+TXV	A*VC960403BNA*	34,600	25,600	14.0	11.5	33,400	25,000	32,000	8.2	19,600	1,080	7995999
	CA*F3137*6A*+TXV	A*VC960603BNA*	34,600	25,600	14.0	11.5	33,400	25,000	32,000	8.2	19,600	1,060	7996000
	CA*F3137*6A*+TXV	A*VC960803BNA*	34,600	25,600	14.0	11.5	33,400	25,000	32,000	8.2	19,600	1,100	7996001
	CA*F3137*6A*+TXV	G*E80603B*B*	34,600	25,600	14.0	11.5	33,400	25,000	32,200	8.2	19,600	1,100	7996002
	CA*F3137*6A*+TXV	G*EC960603BNA*	34,600	25,600	14.0	11.5	33,400	25,000	32,000	8.2	19,600	1,020	7996003
	CA*F3137*6A*+TXV	G*EC960803BNA*	34,600	25,600	14.0	11.5	33,400	25,000	32,000	8.2	19,600	1,010	7996004
	CA*F3137*6A*+TXV	G*VC80604B*B*	34,600	25,600	14.0	11.5	33,400	25,000	32,000	8.2	19,600	1,100	7996005
	CA*F3137*6A*+TXV	G*VC960403BNA*	34,600	25,600	14.0	11.5	33,400	25,000	32,000	8.2	19,600	1,080	7996006
	CA*F3137*6A*+TXV	G*VC960603BNA*	34,600	25,600	14.0	11.5	33,400	25,000	32,000	8.2	19,600	1,060	7996007
	CA*F3137*6A*+TXV	G*VC960803BNA*	34,600	25,600	14.0	11.5	33,400	25,000	32,000	8.2	19,600	1,100	7996008
	CA*F4860*6D*	G*VC80805D*B*	34,600	25,800	14.0	11.5	33,400	25,200	32,200	8.5	20,000	1,100	9924361
	CA*F4860*6D*	A*EC961004CNA*	35,600	26,400	14.0	11.5	34,200	25,800	32,800	8.5	20,000	1,200	7996025
	CA*F4860*6D*	A*EH800805C*A*	34,600	25,600	14.0	11.5	33,400	25,000	32,200	8.5	20,000	1,030	7996026
	CA*F4860*6D*	A*EH801005C*A*	35,600	26,400	14.0	11.5	34,200	25,800	32,200	8.5	20,000	1,090	7996027
	CA*F4860*6D*	A*VC80805C*B*	34,600	25,600	14.0	11.5	33,400	25,000	32,200	8.5	20,000	1,070	7996028
	CA*F4860*6D*	A*VC81005C*B*	34,600	25,600	14.0	11.5	33,400	25,000	32,200	8.5	20,000	1,070	7996029
	CA*F4860*6D*	A*VC960804CNA*	34,800	25,800	14.0	11.5	33,600	25,200	32,400	8.5	20,000	1,080	7996030
	CA*F4860*6D*	A*VC961005CNA*	34,800	25,800	14.0	11.5	33,600	25,200	32,400	8.5	20,000	1,100	7996031
	CA*F4860*6D*	G*E80805C*B*	34,600	25,600	14.0	11.5	33,400	25,000	32,200	8.5	20,000	1,030	7996032
	CA*F4860*6D*	G*E81005C*B*	35,600	26,400	14.0	11.5	34,200	25,800	32,200	8.5	20,000	1,090	7996033
	CA*F4860*6D*	G*EC961004CNA*	35,600	26,400	14.0	11.5	34,200	25,800	32,800	8.5	20,000	1,200	7996034
	CA*F4860*6D*	G*VC80805C*B*	34,600	25,600	14.0	11.5	33,400	25,000	32,200	8.5	20,000	1,070	7996035
	CA*F4860*6D*	G*VC81005C*B*	34,600	25,600	14.0	11.5	33,400	25,000	32,200	8.5	20,000	1,070	7996036
	CA*F4860*6D*	G*VC960804CNA*	34,800	25,800	14.0	11.5	33,600	25,200	32,400	8.5	20,000	1,080	7996037
	CA*F4860*6D*	G*VC961005CNA*	34,800	25,800	14.0	11.5	33,600	25,200	32,400	8.5	20,000	1,100	7996038
	CA*F4860*6D*+MBVC2000**-1A*		35,600	26,400	14.5	12.0	34,200	25,800	32,800	9.0	20,000	1,160	7996009
	CA*F4860*6D*+MBVC2000**-1A*+TXV		35,600	26,400	15.0	12.5	34,200	25,800	32,800	9.0	20,000	1,160	7996010

See Notes on Page 40.

Outdoor Unit	Indoor Units		Cooling Ratings ^				TVA Ratings [3]		Heating Ratings ^			CFM	AHRI #
	Coils/Air Handlers	Furnaces	Total	Sens.	SEER [1]	EER [2]	Total	Sens.	Hi [4]	HSPF [5]	Low [6]		
VSZ14 0361A* (Contd.)	CA*F4860*6D*+TXV	G*VC80805D*B*	34,600	25,800	14.5	12.0	33,400	25,200	32,200	8.5	20,000	1,100	9924362
	CA*F4860*6D*+TXV	A*EC961004CNA*	35,600	26,400	14.5	12.0	34,200	25,800	32,800	8.5	20,000	1,200	7996011
	CA*F4860*6D*+TXV	A*EH800805C*A*	34,600	25,600	14.5	12.0	33,400	25,000	32,200	8.5	20,000	1,030	7996012
	CA*F4860*6D*+TXV	A*EH801005C*A*	35,600	26,400	14.5	12.0	34,200	25,800	32,200	8.5	20,000	1,090	7996013
	CA*F4860*6D*+TXV	A*VC80805C*B*	34,600	25,600	14.5	12.0	33,400	25,000	32,200	8.5	20,000	1,070	7996014
	CA*F4860*6D*+TXV	A*VC81005C*B*	34,600	25,600	14.5	12.0	33,400	25,000	32,200	8.5	20,000	1,070	7996015
	CA*F4860*6D*+TXV	A*VC960804CNA*	34,800	25,800	14.5	12.0	33,600	25,200	32,400	8.5	20,000	1,080	7996016
	CA*F4860*6D*+TXV	A*VC961005CNA*	34,800	25,800	14.5	12.0	33,600	25,200	32,400	8.5	20,000	1,100	7996017
	CA*F4860*6D*+TXV	G*E80805C*B*	34,600	25,600	14.5	12.0	33,400	25,000	32,200	8.5	20,000	1,030	7996018
	CA*F4860*6D*+TXV	G*E81005C*B*	35,600	26,400	14.5	12.0	34,200	25,800	32,200	8.5	20,000	1,090	7996019
	CA*F4860*6D*+TXV	G*EC961004CNA*	35,600	26,400	14.5	12.0	34,200	25,800	32,800	8.5	20,000	1,200	7996020
	CA*F4860*6D*+TXV	G*VC80805C*B*	34,600	25,600	14.5	12.0	33,400	25,000	32,200	8.5	20,000	1,070	7996021
	CA*F4860*6D*+TXV	G*VC81005C*B*	34,600	25,600	14.5	12.0	33,400	25,000	32,200	8.5	20,000	1,070	7996022
	CA*F4860*6D*+TXV	G*VC960804CNA*	34,800	25,800	14.5	12.0	33,600	25,200	32,400	8.5	20,000	1,080	7996023
	CA*F4860*6D*+TXV	G*VC961005CNA*	34,800	25,800	14.5	12.0	33,600	25,200	32,400	8.5	20,000	1,100	7996024
	CA*F4961*6D*	A*EC961205DNA*	35,000	26,000	14.5	11.5	33,800	25,200	32,600	8.5	20,000	1,045	7996049
	CA*F4961*6D*	A*VC961205DNA*	34,800	25,800	14.5	12.0	33,600	25,200	32,600	8.5	20,000	1,050	7996050
	CA*F4961*6D*	G*E80805D*A*	35,600	26,400	14.5	11.5	34,200	25,800	33,000	8.5	20,000	1,275	7996051
	CA*F4961*6D*	G*EC961205DNA*	35,000	26,000	14.5	11.5	33,800	25,200	32,600	8.5	20,000	1,045	7996052
	CA*F4961*6D*	G*VC961205DNA*	34,800	25,800	14.5	12.0	33,600	25,200	32,600	8.5	20,000	1,050	7996053
	CA*F4961*6D*	A*EH800805D*A*	35,600	26,400	14.5	11.5	34,200	25,800	33,000	8.5	20,000	1,275	7999214
	CA*F4961*6D*+EEP+TXV		35,400	26,200	14.0	11.5	34,000	25,600	33,200	8.2	20,600	1,070	7996039
	CA*F4961*6D*+MBVC1200**-1A*		35,600	26,400	14.5	12.0	34,200	25,800	32,400	8.5	20,000	1,050	7996040
	CA*F4961*6D*+MBVC1200**-1A*+TXV		35,600	26,400	15.0	12.5	34,200	25,800	32,400	8.5	20,000	1,050	7996041
	CA*F4961*6D*+MBVC1600**-1A*		35,600	26,400	14.5	12.0	34,200	25,800	32,400	8.5	20,000	1,075	7996042
	CA*F4961*6D*+MBVC1600**-1A*+TXV		35,600	26,400	15.0	12.5	34,200	25,800	32,400	8.5	20,000	1,075	7996043
	CA*F4961*6D*+TXV	A*EC961205DNA*	35,000	26,000	15.0	12.0	33,800	25,200	32,600	8.5	20,000	1,045	7996044
	CA*F4961*6D*+TXV	A*VC961205DNA*	34,800	25,800	15.0	12.5	33,600	25,200	32,600	8.5	20,000	1,050	7996045
	CA*F4961*6D*+TXV	G*E80805D*A*	35,600	26,400	15.0	12.0	34,200	25,800	33,000	8.5	20,000	1,275	7996046
	CA*F4961*6D*+TXV	G*EC961205DNA*	35,000	26,000	15.0	12.0	33,800	25,200	32,600	8.5	20,000	1,045	7996047
	CA*F4961*6D*+TXV	G*VC961205DNA*	34,800	25,800	15.0	12.5	33,600	25,200	32,600	8.5	20,000	1,050	7996048
	CA*F4961*6D*+TXV	A*EH800805D*A*	35,600	26,400	15.0	12.0	34,200	25,800	33,000	8.5	20,000	1,275	7999213
	CAPT4961*4A*+EEP		34,600	25,600	14.0	11.5	33,400	25,000	33,200	8.2	20,600	1,070	9119190
	CHPF3743C6B*	G*VC80805D*B*	35,000	26,000	14.0	11.5	33,800	25,400	32,000	8.5	20,000	1,100	9924363
	CHPF3743C6B*	A*EC961004CNA*	35,000	26,000	14.0	11.5	33,800	25,200	32,800	8.5	20,000	1,200	7996069
	CHPF3743C6B*	A*EH800805C*A*	35,000	26,000	14.0	11.5	33,800	25,200	32,000	8.5	20,000	1,030	7996070
	CHPF3743C6B*	A*EH801005C*A*	34,600	25,600	14.0	11.5	33,400	25,000	32,800	8.5	20,000	1,030	7996071
	CHPF3743C6B*	A*VC80805C*B*	35,000	26,000	14.0	11.5	33,800	25,200	32,000	8.5	20,000	1,070	7996072
	CHPF3743C6B*	A*VC81005C*B*	34,600	25,600	14.0	11.5	33,400	25,000	32,000	8.5	20,000	1,070	7996073
	CHPF3743C6B*	A*VC960804CNA*	34,600	25,600	14.0	11.5	33,400	25,000	32,000	8.5	20,000	1,080	7996074
	CHPF3743C6B*	A*VC961005CNA*	34,600	25,600	14.0	11.5	33,400	25,000	32,000	8.5	20,000	1,100	7996075
	CHPF3743C6B*	G*E80805C*B*	35,000	26,000	14.0	11.5	33,800	25,200	32,000	8.5	20,000	1,030	7996076
	CHPF3743C6B*	G*E81005C*B*	34,600	25,600	14.0	11.5	33,400	25,000	32,800	8.5	20,000	1,030	7996077
	CHPF3743C6B*	G*EC961004CNA*	35,000	26,000	14.0	11.5	33,800	25,200	32,800	8.5	20,000	1,200	7996078
	CHPF3743C6B*	G*VC80805C*B*	35,000	26,000	14.0	11.5	33,800	25,200	32,000	8.5	20,000	1,070	7996079
	CHPF3743C6B*	G*VC81005C*B*	34,600	25,600	14.0	11.5	33,400	25,000	32,000	8.5	20,000	1,070	7996080
	CHPF3743C6B*	G*VC960804CNA*	34,600	25,600	14.0	11.5	33,400	25,000	32,000	8.5	20,000	1,080	7996081
	CHPF3743C6B*	G*VC961005CNA*	34,600	25,600	14.0	11.5	33,400	25,000	32,000	8.5	20,000	1,100	7996082
	CHPF3743C6B*+EEP+TXV		34,600	25,600	14.0	11.5	33,400	25,000	33,000	8.2	20,000	1,080	7996054
	CHPF3743C6B*+TXV	G*VC80805D*B*	35,000	26,000	14.5	12.0	33,800	25,400	32,000	8.5	20,000	1,100	9924364
	CHPF3743C6B*+TXV	A*EC961004CNA*	35,000	26,000	14.5	12.0	33,800	25,200	32,800	8.5	20,000	1,200	7996055

See Notes on Page 40.

Outdoor Unit	Indoor Units		Cooling Ratings ^				TVA Ratings [3]		Heating Ratings ^			CFM	AHRI #
	Coils/Air Handlers	Furnaces	Total	Sens.	SEER [1]	EER [2]	Total	Sens.	HI [4]	HSPF [5]	Low [6]		
VSZ14 0361A* (Contd.)	CHPF3743C6B*+TXV	A*EH800805C*A*	35,000	26,000	14.5	12.0	33,800	25,200	32,000	8.5	20,000	1,030	7996056
	CHPF3743C6B*+TXV	A*EH801005C*A*	34,600	25,600	14.5	12.0	33,400	25,000	32,800	8.5	20,000	1,030	7996057
	CHPF3743C6B*+TXV	A*VC80805C*B*	35,000	26,000	14.5	12.0	33,800	25,200	32,000	8.5	20,000	1,070	7996058
	CHPF3743C6B*+TXV	A*VC81005C*B*	34,600	25,600	14.5	12.0	33,400	25,000	32,000	8.5	20,000	1,070	7996059
	CHPF3743C6B*+TXV	A*VC960804CNA*	34,600	25,600	14.5	12.0	33,400	25,000	32,000	8.5	20,000	1,080	7996060
	CHPF3743C6B*+TXV	A*VC961005CNA*	34,600	25,600	14.5	12.0	33,400	25,000	32,000	8.5	20,000	1,100	7996061
	CHPF3743C6B*+TXV	G*E80805C*B*	35,000	26,000	14.5	12.0	33,800	25,200	32,000	8.5	20,000	1,030	7996062
	CHPF3743C6B*+TXV	G*E81005C*B*	34,600	25,600	14.5	12.0	33,400	25,000	32,800	8.5	20,000	1,030	7996063
	CHPF3743C6B*+TXV	G*EC961004CNA*	35,000	26,000	14.5	12.0	33,800	25,200	32,800	8.5	20,000	1,200	7996064
	CHPF3743C6B*+TXV	G*VC80805C*B*	35,000	26,000	14.5	12.0	33,800	25,200	32,000	8.5	20,000	1,070	7996065
	CHPF3743C6B*+TXV	G*VC81005C*B*	34,600	25,600	14.5	12.0	33,400	25,000	32,000	8.5	20,000	1,070	7996066
	CHPF3743C6B*+TXV	G*VC960804CNA*	34,600	25,600	14.5	12.0	33,400	25,000	32,000	8.5	20,000	1,080	7996067
	CHPF3743C6B*+TXV	G*VC961005CNA*	34,600	25,600	14.5	12.0	33,400	25,000	32,000	8.5	20,000	1,100	7996068
	CHPF4860D6D*	A*EC961205DNA*	35,000	26,000	14.0	11.5	33,800	25,200	32,000	8.5	20,000	1,045	7996092
	CHPF4860D6D*	A*VC961205DNA*	35,000	26,000	14.0	11.5	33,800	25,200	32,000	8.5	20,000	1,050	7996093
	CHPF4860D6D*	G*E80805D*A*	35,600	26,400	14.0	11.5	34,200	25,800	32,800	8.5	20,000	1,275	7996094
	CHPF4860D6D*	G*EC961205DNA*	35,000	26,000	14.0	11.5	33,800	25,200	32,000	8.5	20,000	1,045	7996095
	CHPF4860D6D*	G*VC961205DNA*	35,000	26,000	14.0	11.5	33,800	25,200	32,000	8.5	20,000	1,050	7996096
	CHPF4860D6D*	A*EH800805D*A*	35,600	26,400	14.0	11.5	34,200	25,800	32,800	8.5	20,000	1,275	7999217
	CHPF4860D6D*+MBVC1600**-1A*		35,400	26,200	14.5	12.0	34,000	25,600	32,400	8.5	20,000	1,075	7996083
	CHPF4860D6D*+MBVC1600**-1A*+TXV		35,400	26,200	15.0	12.5	34,000	25,600	32,400	8.5	20,000	1,075	7996084
	CHPF4860D6D*+MBVC2000**-1A*		36,000	26,600	14.5	12.0	34,600	26,000	32,600	8.5	20,000	1,275	7996085
	CHPF4860D6D*+MBVC2000**-1A*+TXV		36,000	26,600	15.0	12.5	34,600	26,000	32,600	8.5	20,000	1,275	7996086
	CHPF4860D6D*+TXV	A*EC961205DNA*	35,000	26,000	14.5	12.0	33,800	25,200	32,000	8.5	20,000	1,045	7996087
	CHPF4860D6D*+TXV	A*VC961205DNA*	35,000	26,000	14.5	12.0	33,800	25,200	32,000	8.5	20,000	1,050	7996088
	CHPF4860D6D*+TXV	G*E80805D*A*	35,600	26,400	14.5	12.0	34,200	25,800	32,800	8.5	20,000	1,275	7996089
	CHPF4860D6D*+TXV	G*EC961205DNA*	35,000	26,000	14.5	12.0	33,800	25,200	32,000	8.5	20,000	1,045	7996090
	CHPF4860D6D*+TXV	G*VC961205DNA*	35,000	26,000	14.5	12.0	33,800	25,200	32,000	8.5	20,000	1,050	7996091
	CHPF4860D6D*+TXV	A*EH800805D*A*	35,600	26,400	14.5	12.0	34,200	25,800	32,800	8.5	20,000	1,275	7999215
	CSCF4860N6D*	G*VC80805D*B*	35,000	26,000	14.0	11.5	33,800	25,400	32,000	8.5	20,000	1,100	9924365
	CSCF4860N6D*	A*EC961004CNA*	35,600	26,400	14.0	11.5	34,200	25,800	32,800	8.5	20,000	1,230	7996123
	CSCF4860N6D*	A*EC961205DNA*	35,000	26,000	14.0	11.5	33,800	25,200	32,000	8.5	20,000	1,045	7996124
	CSCF4860N6D*	A*EH800805C*A*	35,000	26,000	14.0	11.5	33,800	25,200	32,000	8.5	20,000	1,030	7996125
	CSCF4860N6D*	A*EH801005C*A*	35,000	26,000	14.0	11.5	33,800	25,200	32,800	8.5	20,000	1,030	7996126
	CSCF4860N6D*	A*VC80805C*B*	35,000	26,000	14.0	11.5	33,800	25,200	32,000	8.5	20,000	1,070	7996127
	CSCF4860N6D*	A*VC81005C*B*	35,000	26,000	14.0	11.5	33,800	25,200	32,000	8.5	20,000	1,070	7996128
	CSCF4860N6D*	A*VC960804CNA*	35,000	26,000	14.0	11.5	33,800	25,200	32,000	8.5	20,000	1,080	7996129
	CSCF4860N6D*	A*VC961005CNA*	35,000	26,000	14.0	11.5	33,800	25,200	32,000	8.5	20,000	1,100	7996130
	CSCF4860N6D*	A*VC961205DNA*	35,000	26,000	14.0	11.5	33,800	25,200	32,000	8.5	20,000	1,050	7996131
	CSCF4860N6D*	G*E80805C*B*	35,000	26,000	14.0	11.5	33,800	25,200	32,000	8.5	20,000	1,030	7996132
	CSCF4860N6D*	G*E80805D*A*	35,600	26,400	14.0	11.5	34,200	25,800	32,800	8.5	20,000	1,275	7996133
	CSCF4860N6D*	G*E81005C*B*	35,000	26,000	14.0	11.5	33,800	25,200	32,800	8.5	20,000	1,030	7996134
	CSCF4860N6D*	G*EC961004CNA*	35,600	26,400	14.0	11.5	34,200	25,800	32,800	8.5	20,000	1,230	7996135
	CSCF4860N6D*	G*EC961205DNA*	35,000	26,000	14.0	11.5	33,800	25,200	32,000	8.5	20,000	1,045	7996136
	CSCF4860N6D*	G*VC80805C*B*	35,000	26,000	14.0	11.5	33,800	25,200	32,000	8.5	20,000	1,070	7996137
	CSCF4860N6D*	G*VC81005C*B*	35,000	26,000	14.0	11.5	33,800	25,200	32,000	8.5	20,000	1,070	7996138
	CSCF4860N6D*	G*VC960804CNA*	35,000	26,000	14.0	11.5	33,800	25,200	32,000	8.5	20,000	1,080	7996139
	CSCF4860N6D*	G*VC961005CNA*	35,000	26,000	14.0	11.5	33,800	25,200	32,000	8.5	20,000	1,100	7996140
	CSCF4860N6D*	G*VC961205DNA*	35,000	26,000	14.0	11.5	33,800	25,200	32,000	8.5	20,000	1,050	7996141
	CSCF4860N6D*	A*EH800805D*A*	35,600	26,400	14.0	11.5	34,200	25,800	32,800	8.5	20,000	1,275	7999219
	CSCF4860N6D*+EEP+TXV		34,600	25,600	14.0	11.5	33,400	25,000	33,000	8.2	20,000	1,080	7996097

See Notes on Page 40.

Outdoor Unit	Indoor Units		Cooling Ratings ^				TVA Ratings [3]		Heating Ratings ^			CFM	AHRI #
	Coils/Air Handlers	Furnaces	Total	Sens.	SEER [1]	EER [2]	Total	Sens.	Hi [4]	HSPF [5]	Low [6]		
VSZ14 0361A* (Contd.)	CSCF4860N6D*+MBVC1200**-1A*		35,000	26,000	14.0	11.5	33,800	25,200	32,000	8.5	20,000	1,050	7996098
	CSCF4860N6D*+MBVC1200**-1A*+TXV		35,000	26,000	14.5	12.0	33,800	25,200	32,000	8.5	20,000	1,050	7996099
	CSCF4860N6D*+MBVC1600**-1A*		35,400	26,200	14.5	12.0	34,000	25,600	32,400	8.5	20,000	1,075	7996100
	CSCF4860N6D*+MBVC1600**-1A*+TXV		35,400	26,200	15.0	12.5	34,000	25,600	32,400	8.5	20,000	1,075	7996101
	CSCF4860N6D*+MBVC2000**-1A*		36,000	26,600	14.5	12.0	34,600	26,000	32,600	8.5	20,000	1,275	7996102
	CSCF4860N6D*+MBVC2000**-1A*+TXV		36,000	26,600	15.0	12.5	34,600	26,000	32,600	8.5	20,000	1,275	7996103
	CSCF4860N6D*+TXV	G*VC80805D*B*	35,000	26,000	14.5	12.0	33,800	25,400	32,000	8.5	20,000	1,100	9924366
	CSCF4860N6D*+TXV	A*EC961004CNA*	35,600	26,400	14.5	12.0	34,200	25,800	32,800	8.5	20,000	1,230	7996104
	CSCF4860N6D*+TXV	A*EC961205DNA*	35,000	26,000	14.5	12.0	33,800	25,200	32,000	8.5	20,000	1,045	7996105
	CSCF4860N6D*+TXV	A*EH800805C*A*	35,000	26,000	14.5	12.0	33,800	25,200	32,000	8.5	20,000	1,030	7996106
	CSCF4860N6D*+TXV	A*EH801005C*A*	35,000	26,000	14.5	12.0	33,800	25,200	32,800	8.5	20,000	1,030	7996107
	CSCF4860N6D*+TXV	A*VC80805C*B*	35,000	26,000	14.5	12.0	33,800	25,200	32,000	8.5	20,000	1,070	7996108
	CSCF4860N6D*+TXV	A*VC81005C*B*	35,000	26,000	14.5	12.0	33,800	25,200	32,000	8.5	20,000	1,070	7996109
	CSCF4860N6D*+TXV	A*VC960804CNA*	35,000	26,000	14.5	12.0	33,800	25,200	32,000	8.5	20,000	1,080	7996110
	CSCF4860N6D*+TXV	A*VC961005CNA*	35,000	26,000	14.5	12.0	33,800	25,200	32,000	8.5	20,000	1,100	7996111
	CSCF4860N6D*+TXV	A*VC961205DNA*	35,000	26,000	14.5	12.0	33,800	25,200	32,000	8.5	20,000	1,050	7996112
	CSCF4860N6D*+TXV	G*E80805C*B*	35,000	26,000	14.5	12.0	33,800	25,200	32,000	8.5	20,000	1,030	7996113
	CSCF4860N6D*+TXV	G*E80805D*A*	35,600	26,400	14.5	12.0	34,200	25,800	32,800	8.5	20,000	1,275	7996114
	CSCF4860N6D*+TXV	G*E81005C*B*	35,000	26,000	14.5	12.0	33,800	25,200	32,800	8.5	20,000	1,030	7996115
	CSCF4860N6D*+TXV	G*EC961004CNA*	35,600	26,400	14.5	12.0	34,200	25,800	32,800	8.5	20,000	1,230	7996116
	CSCF4860N6D*+TXV	G*EC961205DNA*	35,000	26,000	14.5	12.0	33,800	25,200	32,000	8.5	20,000	1,045	7996117
	CSCF4860N6D*+TXV	G*VC80805C*B*	35,000	26,000	14.5	12.0	33,800	25,200	32,000	8.5	20,000	1,070	7996118
	CSCF4860N6D*+TXV	G*VC81005C*B*	35,000	26,000	14.5	12.0	33,800	25,200	32,000	8.5	20,000	1,070	7996119
	CSCF4860N6D*+TXV	G*VC960804CNA*	35,000	26,000	14.5	12.0	33,800	25,200	32,000	8.5	20,000	1,080	7996120
	CSCF4860N6D*+TXV	G*VC961005CNA*	35,000	26,000	14.5	12.0	33,800	25,200	32,000	8.5	20,000	1,100	7996121
	CSCF4860N6D*+TXV	G*VC961205DNA*	35,000	26,000	14.5	12.0	33,800	25,200	32,000	8.5	20,000	1,050	7996122
	CSCF4860N6D*+TXV	A*EH800805D*A*	35,600	26,400	14.5	12.0	34,200	25,800	32,800	8.5	20,000	1,275	7999218
VSZ14 0421A*	ARUF43C14A*+TXV		39,000	29,600	14.0	11.5	37,600	29,000	40,000	8.2	24,000	1,300	7996142
	ARUF47D14A*		39,000	29,600	14.0	11.5	37,600	29,000	39,000	8.2	24,000	1,325	7996143
	ASPT47C14B*		39,500	30,000	14.0	12.0	38,000	29,400	39,000	8.2	23,000	1,320	201817176
	ASPT47D14A*		38,500	29,200	15.0	12.5	37,200	28,600	38,000	8.5	23,000	1,205	8242669
	ASPT49D14A*		40,000	30,400	15.0	12.5	38,500	29,600	39,000	8.5	23,000	1,320	8242670
	ASPT59C14A*		39,500	30,000	14.0	12.0	38,000	29,400	39,000	8.2	23,000	1,255	8242672
	AVPTC42D14A*		39,500	30,000	15.0	12.5	38,000	29,400	39,000	8.5	23,000	1,220	7996144
	CA*F4860*6D*	G*VC80805D*B*	39,500	30,800	14.0	11.5	38,000	30,000	39,000	8.5	23,600	1,400	9924367
	CA*F4860*6D*	A*EC961004CNA*	39,500	30,000	14.0	11.5	38,000	29,400	39,000	8.5	23,600	1,230	7996169
	CA*F4860*6D*	A*EC961205DNA*	39,500	30,000	14.0	11.5	38,000	29,400	39,500	8.5	23,600	1,300	7996170
	CA*F4860*6D*	A*EH800805C*A*	39,500	30,000	14.0	11.5	38,000	29,400	39,500	8.5	23,600	1,325	7996171
	CA*F4860*6D*	A*EH801005C*A*	39,500	30,000	14.0	11.5	38,000	29,400	39,000	8.5	23,600	1,225	7996172
	CA*F4860*6D*	A*VC80805C*B*	39,500	30,000	14.0	11.5	38,000	29,400	39,000	8.5	23,600	1,240	7996173
	CA*F4860*6D*	A*VC81005C*B*	39,500	30,000	14.0	11.5	38,000	29,400	39,000	8.5	23,600	1,250	7996174
	CA*F4860*6D*	A*VC960804CNA*	39,500	30,000	14.0	11.5	38,000	29,400	39,500	8.5	23,600	1,310	7996175
	CA*F4860*6D*	A*VC961005CNA*	39,500	30,000	14.0	11.5	38,000	29,400	39,500	8.5	23,600	1,300	7996176
	CA*F4860*6D*	A*VC961205DNA*	39,500	30,000	14.0	11.5	38,000	29,400	39,000	8.5	23,600	1,250	7996177
	CA*F4860*6D*	G*E80805C*B*	39,500	30,000	14.0	11.5	38,000	29,400	39,500	8.5	23,600	1,325	7996178
	CA*F4860*6D*	G*E80805D*A*	39,500	30,000	14.0	11.5	38,000	29,400	39,500	8.5	23,600	1,280	7996179
	CA*F4860*6D*	G*E81005C*B*	39,500	30,000	14.0	11.5	38,000	29,400	39,000	8.5	23,600	1,225	7996180
	CA*F4860*6D*	G*EC961004CNA*	39,500	30,000	14.0	11.5	38,000	29,400	39,000	8.5	23,600	1,230	7996181
	CA*F4860*6D*	G*EC961205DNA*	39,500	30,000	14.0	11.5	38,000	29,400	39,500	8.5	23,600	1,300	7996182
	CA*F4860*6D*	G*VC80805C*B*	39,500	30,000	14.0	11.5	38,000	29,400	39,000	8.5	23,600	1,240	7996183
	CA*F4860*6D*	G*VC81005C*B*	39,500	30,000	14.0	11.5	38,000	29,400	39,000	8.5	23,600	1,250	7996184

See Notes on Page 40.

Outdoor Unit	Indoor Units		Cooling Ratings ^				TVA Ratings [3]		Heating Ratings ^			CFM	AHRI #
	Coils/Air Handlers	Furnaces	Total	Sens.	SEER [1]	EER [2]	Total	Sens.	HI [4]	HSPF [5]	Low [6]		
VSZ14 0421A* (Contd.)	CA*F4860*6D*	G*VC960804CNA*	39,500	30,000	14.0	11.5	38,000	29,400	39,500	8.5	23,600	1,310	7996185
	CA*F4860*6D*	G*VC961005CNA*	39,500	30,000	14.0	11.5	38,000	29,400	39,500	8.5	23,600	1,300	7996186
	CA*F4860*6D*	G*VC961205DNA*	39,500	30,000	14.0	11.5	38,000	29,400	39,000	8.5	23,600	1,250	7996187
	CA*F4860*6D*	A*EH800805D*A*	39,500	30,000	14.0	11.5	38,000	29,400	39,500	8.5	23,600	1,280	7999222
	CA*F4860*6D*+EEP+TXV		39,500	30,000	14.0	11.5	38,000	29,400	39,500	8.2	24,000	1,300	7996145
	CA*F4860*6D*+MBVC1600**-1A*		40,000	30,400	14.5	12.0	38,500	29,600	39,000	8.5	23,600	1,300	7996146
	CA*F4860*6D*+MBVC1600**-1A*+TXV		40,000	30,400	15.0	12.5	38,500	29,600	39,000	8.5	23,600	1,300	7996147
	CA*F4860*6D*+MBVC2000**-1A*		40,500	30,800	14.5	12.0	39,000	30,000	39,000	9.0	23,600	1,310	7996148
	CA*F4860*6D*+MBVC2000**-1A*+TXV		40,500	30,800	15.0	12.5	39,000	30,000	39,000	9.0	23,600	1,310	7996149
	CA*F4860*6D*+TXV	G*VC80805D*B*	39,500	30,800	14.5	12.0	38,000	30,000	39,000	8.5	23,600	1,400	9924368
	CA*F4860*6D*+TXV	A*EC961004CNA*	39,500	30,000	14.5	12.0	38,000	29,400	39,000	8.5	23,600	1,230	7996150
	CA*F4860*6D*+TXV	A*EC961205DNA*	39,500	30,000	14.5	12.0	38,000	29,400	39,500	8.5	23,600	1,300	7996151
	CA*F4860*6D*+TXV	A*EH800805C*A*	39,500	30,000	14.5	12.0	38,000	29,400	39,500	8.5	23,600	1,325	7996152
	CA*F4860*6D*+TXV	A*EH801005C*A*	39,500	30,000	14.5	12.0	38,000	29,400	39,000	8.5	23,600	1,225	7996153
	CA*F4860*6D*+TXV	A*VC80805C*B*	39,500	30,000	14.5	12.0	38,000	29,400	39,000	8.5	23,600	1,240	7996154
	CA*F4860*6D*+TXV	A*VC81005C*B*	39,500	30,000	14.5	12.0	38,000	29,400	39,000	8.5	23,600	1,250	7996155
	CA*F4860*6D*+TXV	A*VC960804CNA*	39,500	30,000	14.5	12.0	38,000	29,400	39,500	8.5	23,600	1,310	7996156
	CA*F4860*6D*+TXV	A*VC961005CNA*	39,500	30,000	14.5	12.0	38,000	29,400	39,500	8.5	23,600	1,300	7996157
	CA*F4860*6D*+TXV	A*VC961205DNA*	39,500	30,000	14.5	12.0	38,000	29,400	39,000	8.5	23,600	1,250	7996158
	CA*F4860*6D*+TXV	G*E80805C*B*	39,500	30,000	14.5	12.0	38,000	29,400	39,500	8.5	23,600	1,325	7996159
	CA*F4860*6D*+TXV	G*E80805D*A*	39,500	30,000	14.5	12.0	38,000	29,400	39,500	8.5	23,600	1,280	7996160
	CA*F4860*6D*+TXV	G*E81005C*B*	39,500	30,000	14.5	12.0	38,000	29,400	39,000	8.5	23,600	1,225	7996161
	CA*F4860*6D*+TXV	G*EC961004CNA*	39,500	30,000	14.5	12.0	38,000	29,400	39,000	8.5	23,600	1,230	7996162
	CA*F4860*6D*+TXV	G*EC961205DNA*	39,500	30,000	14.5	12.0	38,000	29,400	39,500	8.5	23,600	1,300	7996163
	CA*F4860*6D*+TXV	G*VC80805C*B*	39,500	30,000	14.5	12.0	38,000	29,400	39,000	8.5	23,600	1,240	7996164
	CA*F4860*6D*+TXV	G*VC81005C*B*	39,500	30,000	14.5	12.0	38,000	29,400	39,000	8.5	23,600	1,250	7996165
	CA*F4860*6D*+TXV	G*VC960804CNA*	39,500	30,000	14.5	12.0	38,000	29,400	39,500	8.5	23,600	1,310	7996166
	CA*F4860*6D*+TXV	G*VC961005CNA*	39,500	30,000	14.5	12.0	38,000	29,400	39,500	8.5	23,600	1,300	7996167
	CA*F4860*6D*+TXV	G*VC961205DNA*	39,500	30,000	14.5	12.0	38,000	29,400	39,000	8.5	23,600	1,250	7996168
	CA*F4860*6D*+TXV	A*EH800805D*A*	39,500	30,000	14.5	12.0	38,000	29,400	39,500	8.5	23,600	1,280	7999220
	CA*F4961*6D*	G*VC80805D*B*	40,000	31,000	14.5	12.0	38,500	30,400	39,500	8.5	23,800	1,400	9924369
	CA*F4961*6D*	A*EC961004CNA*	40,000	30,400	14.5	12.0	38,500	29,600	39,500	8.5	23,800	1,230	7996212
	CA*F4961*6D*	A*EC961205DNA*	40,000	30,400	14.5	12.0	38,500	29,600	40,000	8.5	24,000	1,300	7996213
	CA*F4961*6D*	A*EH800805C*A*	40,000	30,400	14.5	12.0	38,500	29,600	39,500	8.5	23,800	1,325	7996214
	CA*F4961*6D*	A*EH801005C*A*	40,000	30,400	14.5	12.0	38,500	29,600	39,500	8.5	23,800	1,225	7996215
	CA*F4961*6D*	A*VC80805C*B*	40,000	30,400	14.5	12.0	38,500	29,600	39,500	8.5	23,800	1,240	7996216
	CA*F4961*6D*	A*VC81005C*B*	40,000	30,400	14.5	12.0	38,500	29,600	39,500	8.5	23,800	1,250	7996217
	CA*F4961*6D*	A*VC960804CNA*	40,000	30,400	14.5	12.0	38,500	29,600	39,500	8.5	23,800	1,310	7996218
	CA*F4961*6D*	A*VC961005CNA*	40,000	30,400	14.5	12.0	38,500	29,600	39,500	8.5	23,800	1,300	7996219
	CA*F4961*6D*	A*VC961205DNA*	40,000	30,400	14.5	12.0	38,500	29,600	39,500	8.5	23,800	1,250	7996220
	CA*F4961*6D*	G*E80805C*B*	40,000	30,400	14.5	12.0	38,500	29,600	39,500	8.5	23,800	1,325	7996221
	CA*F4961*6D*	G*E80805D*A*	40,000	30,400	14.5	12.0	38,500	29,600	39,500	8.5	23,800	1,280	7996222
	CA*F4961*6D*	G*E81005C*B*	40,000	30,400	14.5	12.0	38,500	29,600	39,500	8.5	23,800	1,225	7996223
	CA*F4961*6D*	G*EC961004CNA*	40,000	30,400	14.5	12.0	38,500	29,600	39,500	8.5	23,800	1,230	7996224
	CA*F4961*6D*	G*EC961205DNA*	40,000	30,400	14.5	12.0	38,500	29,600	40,000	8.5	24,000	1,300	7996225
	CA*F4961*6D*	G*VC80805C*B*	40,000	30,400	14.5	12.0	38,500	29,600	39,500	8.5	23,800	1,240	7996226
	CA*F4961*6D*	G*VC81005C*B*	40,000	30,400	14.5	12.0	38,500	29,600	39,500	8.5	23,800	1,250	7996227
	CA*F4961*6D*	G*VC960804CNA*	40,000	30,400	14.5	12.0	38,500	29,600	39,500	8.5	23,800	1,310	7996228
	CA*F4961*6D*	G*VC961005CNA*	40,000	30,400	14.5	12.0	38,500	29,600	39,500	8.5	23,800	1,300	7996229
	CA*F4961*6D*	G*VC961205DNA*	40,000	30,400	14.5	12.0	38,500	29,600	39,500	8.5	23,800	1,250	7996230
	CA*F4961*6D*	A*EH800805D*A*	40,000	30,400	14.5	12.0	38,500	29,600	39,500	8.5	23,800	1,280	7999225

See Notes on Page 40.

Outdoor Unit	Indoor Units		Cooling Ratings ^				TVA Ratings [3]		Heating Ratings ^			CFM	AHRI #
	Coils/Air Handlers	Furnaces	Total	Sens.	SEER [1]	EER [2]	Total	Sens.	Hi [4]	HSPF [5]	Low [6]		
VSZ14 0421A* (Contd.)	CA*F4961*6D*+EEP+TXV		40,000	30,400	14.0	12.0	38,500	29,600	40,000	8.5	24,000	1,300	7996188
	CA*F4961*6D*+MBVC1600**-1A*		40,000	30,400	14.5	12.0	38,500	29,600	39,500	9.0	23,800	1,300	7996189
	CA*F4961*6D*+MBVC1600**-1A*+TXV		40,000	30,400	15.0	12.5	38,500	29,600	39,500	9.0	23,800	1,300	7996190
	CA*F4961*6D*+MBVC2000**-1A*		40,500	30,800	14.5	12.0	39,000	30,000	39,000	9.0	23,800	1,310	7996191
	CA*F4961*6D*+MBVC2000**-1A*+TXV		40,500	30,800	15.0	12.5	39,000	30,000	39,000	9.0	23,800	1,310	7996192
	CA*F4961*6D*+TXV	G*VC80805D*B*	40,000	31,000	15.0	12.5	38,500	30,400	39,500	8.5	23,800	1,400	9924370
	CA*F4961*6D*+TXV	A*EC961004CNA*	40,000	30,400	15.0	12.5	38,500	29,600	39,500	8.5	23,800	1,230	7996193
	CA*F4961*6D*+TXV	A*EC961205DNA*	40,000	30,400	15.0	12.5	38,500	29,600	40,000	8.5	24,000	1,300	7996194
	CA*F4961*6D*+TXV	A*EH800805C*A*	40,000	30,400	15.0	12.5	38,500	29,600	39,500	8.5	23,800	1,325	7996195
	CA*F4961*6D*+TXV	A*EH801005C*A*	40,000	30,400	15.0	12.5	38,500	29,600	39,500	8.5	23,800	1,225	7996196
	CA*F4961*6D*+TXV	A*VC80805C*B*	40,000	30,400	15.0	12.5	38,500	29,600	39,500	8.5	23,800	1,240	7996197
	CA*F4961*6D*+TXV	A*VC81005C*B*	40,000	30,400	15.0	12.5	38,500	29,600	39,500	8.5	23,800	1,250	7996198
	CA*F4961*6D*+TXV	A*VC960804CNA*	40,000	30,400	15.0	12.5	38,500	29,600	39,500	8.5	23,800	1,310	7996199
	CA*F4961*6D*+TXV	A*VC961005CNA*	40,000	30,400	15.0	12.5	38,500	29,600	39,500	8.5	23,800	1,300	7996200
	CA*F4961*6D*+TXV	A*VC961205DNA*	40,000	30,400	15.0	12.5	38,500	29,600	39,500	8.5	23,800	1,250	7996201
	CA*F4961*6D*+TXV	G*E80805C*B*	40,000	30,400	15.0	12.5	38,500	29,600	39,500	8.5	23,800	1,325	7996202
	CA*F4961*6D*+TXV	G*E80805D*A*	40,000	30,400	15.0	12.5	38,500	29,600	39,500	8.5	23,800	1,280	7996203
	CA*F4961*6D*+TXV	G*E81005C*B*	40,000	30,400	15.0	12.5	38,500	29,600	39,500	8.5	23,800	1,225	7996204
	CA*F4961*6D*+TXV	G*EC961004CNA*	40,000	30,400	15.0	12.5	38,500	29,600	39,500	8.5	23,800	1,230	7996205
	CA*F4961*6D*+TXV	G*EC961205DNA*	40,000	30,400	15.0	12.5	38,500	29,600	40,000	8.5	24,000	1,300	7996206
	CA*F4961*6D*+TXV	G*VC80805C*B*	40,000	30,400	15.0	12.5	38,500	29,600	39,500	8.5	23,800	1,240	7996207
	CA*F4961*6D*+TXV	G*VC81005C*B*	40,000	30,400	15.0	12.5	38,500	29,600	39,500	8.5	23,800	1,250	7996208
	CA*F4961*6D*+TXV	G*VC960804CNA*	40,000	30,400	15.0	12.5	38,500	29,600	39,500	8.5	23,800	1,310	7996209
	CA*F4961*6D*+TXV	G*VC961005CNA*	40,000	30,400	15.0	12.5	38,500	29,600	39,500	8.5	23,800	1,300	7996210
	CA*F4961*6D*+TXV	G*VC961205DNA*	40,000	30,400	15.0	12.5	38,500	29,600	39,500	8.5	23,800	1,250	7996211
	CA*F4961*6D*+TXV	A*EH800805D*A*	40,000	30,400	15.0	12.5	38,500	29,600	39,500	8.5	23,800	1,280	7999224
	CHPF4860D6D*	A*EC961205DNA*	40,000	30,400	14.0	12.0	38,500	29,600	39,500	8.5	23,600	1,300	7996241
	CHPF4860D6D*	A*VC961205DNA*	39,500	30,000	14.0	12.0	38,000	29,400	39,000	8.5	23,600	1,250	7996242
	CHPF4860D6D*	G*E80805D*A*	39,500	30,000	14.0	12.0	38,000	29,400	39,500	8.5	23,600	1,280	7996243
	CHPF4860D6D*	G*EC961205DNA*	40,000	30,400	14.0	12.0	38,500	29,600	39,500	8.5	23,600	1,300	7996244
	CHPF4860D6D*	G*VC961205DNA*	39,500	30,000	14.0	12.0	38,000	29,400	39,000	8.5	23,600	1,250	7996245
	CHPF4860D6D*	A*EH800805D*A*	39,500	30,000	14.0	12.0	38,000	29,400	39,500	8.5	23,600	1,280	7999228
	CHPF4860D6D*+EEP+TXV		39,000	29,600	14.0	11.5	37,600	29,000	39,500	8.5	24,000	1,300	7996231
	CHPF4860D6D*+MBVC1600**-1A*		40,000	30,400	14.5	12.0	38,500	29,600	39,000	8.5	23,600	1,300	7996232
	CHPF4860D6D*+MBVC1600**-1A*+TXV		40,000	30,400	15.0	12.5	38,500	29,600	39,000	8.5	23,600	1,300	7996233
	CHPF4860D6D*+MBVC2000**-1A*		40,000	30,400	14.5	12.0	38,500	29,600	39,000	9.0	23,600	1,310	7996234
	CHPF4860D6D*+MBVC2000**-1A*+TXV		40,000	30,400	15.0	12.5	38,500	29,600	39,000	9.0	23,600	1,310	7996235
	CHPF4860D6D*+TXV	A*EC961205DNA*	40,000	30,400	14.5	12.0	38,500	29,600	39,500	8.5	23,600	1,300	7996236
	CHPF4860D6D*+TXV	A*VC961205DNA*	39,500	30,000	14.5	12.0	38,000	29,400	39,000	8.5	23,600	1,250	7996237
	CHPF4860D6D*+TXV	G*E80805D*A*	39,500	30,000	14.5	12.0	38,000	29,400	39,500	8.5	23,600	1,280	7996238
	CHPF4860D6D*+TXV	G*EC961205DNA*	40,000	30,400	14.5	12.0	38,500	29,600	39,500	8.5	23,600	1,300	7996239
	CHPF4860D6D*+TXV	G*VC961205DNA*	39,500	30,000	14.5	12.0	38,000	29,400	39,000	8.5	23,600	1,250	7996240
	CHPF4860D6D*+TXV	A*EH800805D*A*	39,500	30,000	14.5	12.0	38,000	29,400	39,500	8.5	23,600	1,280	7999226
	CSCF4860N6D*	G*VC80805D*B*	40,000	31,000	14.5	12.0	38,500	30,400	39,500	8.5	23,600	1,400	9924371
	CSCF4860N6D*	A*EC961004CNA*	40,500	30,800	14.0	12.0	39,000	30,000	39,000	8.5	23,600	1,230	7996270
	CSCF4860N6D*	A*EC961205DNA*	40,000	30,400	14.0	12.0	38,500	29,600	40,000	8.5	23,600	1,300	7996271
	CSCF4860N6D*	A*EH800805C*A*	40,500	30,800	14.0	12.0	39,000	30,000	39,500	8.5	23,600	1,325	7996272
	CSCF4860N6D*	A*EH801005C*A*	40,500	30,800	14.0	12.0	39,000	30,000	39,000	8.5	23,600	1,225	7996273
	CSCF4860N6D*	A*VC80805C*B*	40,000	30,400	14.5	12.0	38,500	29,600	39,500	8.5	23,600	1,240	7996274
	CSCF4860N6D*	A*VC81005C*B*	40,000	30,400	14.5	12.0	38,500	29,600	39,500	8.5	23,600	1,250	7996275
	CSCF4860N6D*	A*VC960804CNA*	40,000	30,400	14.5	12.0	38,500	29,600	39,500	8.5	23,600	1,310	7996276

See Notes on Page 40.

Outdoor Unit	Indoor Units		Cooling Ratings ^				TVA Ratings [3]		Heating Ratings ^			CFM	AHRI #
	Coils/Air Handlers	Furnaces	Total	Sens.	SEER [1]	EER [2]	Total	Sens.	HI [4]	HSPF [5]	Low [6]		
VSZ14 0421A* (Contd.)	CSCF4860N6D*	A*VC961005CNA*	40,000	30,400	14.5	12.0	38,500	29,600	39,500	8.5	23,600	1,300	7996277
	CSCF4860N6D*	A*VC961205DNA*	40,000	30,400	14.5	12.0	38,500	29,600	39,500	8.5	23,600	1,250	7996278
	CSCF4860N6D*	G*E80805C*B*	40,500	30,800	14.0	12.0	39,000	30,000	39,500	8.5	23,600	1,325	7996279
	CSCF4860N6D*	G*E80805D*A*	40,500	30,800	14.0	12.0	39,000	30,000	39,500	8.5	23,600	1,280	7996280
	CSCF4860N6D*	G*E81005C*B*	40,500	30,800	14.0	12.0	39,000	30,000	39,000	8.5	23,600	1,225	7996281
	CSCF4860N6D*	G*EC961004CNA*	40,500	30,800	14.0	12.0	39,000	30,000	39,000	8.5	23,600	1,230	7996282
	CSCF4860N6D*	G*EC961205DNA*	40,000	30,400	14.0	12.0	38,500	29,600	40,000	8.5	23,600	1,300	7996283
	CSCF4860N6D*	G*VC80805C*B*	40,000	30,400	14.5	12.0	38,500	29,600	39,500	8.5	23,600	1,240	7996284
	CSCF4860N6D*	G*VC81005C*B*	40,000	30,400	14.5	12.0	38,500	29,600	39,500	8.5	23,600	1,250	7996285
	CSCF4860N6D*	G*VC960804CNA*	40,000	30,400	14.5	12.0	38,500	29,600	39,500	8.5	23,600	1,310	7996286
	CSCF4860N6D*	G*VC961005CNA*	40,000	30,400	14.5	12.0	38,500	29,600	39,500	8.5	23,600	1,300	7996287
	CSCF4860N6D*	G*VC961205DNA*	40,000	30,400	14.5	12.0	38,500	29,600	39,500	8.5	23,600	1,250	7996288
	CSCF4860N6D*	A*EH800805D*A*	40,500	30,800	14.0	12.0	39,000	30,000	39,500	8.5	23,600	1,280	7999231
	CSCF4860N6D*+EEP+TXV		40,500	30,800	14.0	12.0	39,000	30,000	40,000	8.5	24,000	1,300	7996246
	CSCF4860N6D*+MBVC1600**-1A*		40,000	30,400	14.5	12.0	38,500	29,600	39,500	8.5	23,600	1,300	7996247
	CSCF4860N6D*+MBVC1600**-1A*+TXV		40,000	30,400	15.0	12.5	38,500	29,600	39,500	8.5	23,600	1,300	7996248
	CSCF4860N6D*+MBVC2000**-1A*		40,000	30,400	14.5	12.5	38,500	29,600	39,500	9.0	23,600	1,310	7996249
	CSCF4860N6D*+MBVC2000**-1A*+TXV		40,000	30,400	15.0	13.0	38,500	29,600	39,000	9.0	23,600	1,310	7996250
	CSCF4860N6D*+TXV	G*VC80805D*B*	40,000	31,000	15.0	12.0	38,500	30,400	39,500	8.5	23,600	1,400	9924372
	CSCF4860N6D*+TXV	A*EC961004CNA*	40,500	30,800	14.5	12.0	39,000	30,000	39,000	8.5	23,600	1,230	7996251
	CSCF4860N6D*+TXV	A*EC961205DNA*	40,000	30,400	14.5	12.0	38,500	29,600	40,000	8.5	23,600	1,300	7996252
	CSCF4860N6D*+TXV	A*EH800805C*A*	40,500	30,800	14.5	12.0	39,000	30,000	39,500	8.5	23,600	1,325	7996253
	CSCF4860N6D*+TXV	A*EH801005C*A*	40,500	30,800	14.5	12.0	39,000	30,000	39,000	8.5	23,600	1,225	7996254
	CSCF4860N6D*+TXV	A*VC80805C*B*	40,000	30,400	15.0	12.0	38,500	29,600	39,500	8.5	23,600	1,240	7996255
	CSCF4860N6D*+TXV	A*VC81005C*B*	40,000	30,400	15.0	12.0	38,500	29,600	39,500	8.5	23,600	1,250	7996256
	CSCF4860N6D*+TXV	A*VC960804CNA*	40,000	30,400	15.0	12.0	38,500	29,600	39,500	8.5	23,600	1,310	7996257
	CSCF4860N6D*+TXV	A*VC961005CNA*	40,000	30,400	15.0	12.0	38,500	29,600	39,500	8.5	23,600	1,300	7996258
	CSCF4860N6D*+TXV	A*VC961205DNA*	40,000	30,400	15.0	12.0	38,500	29,600	39,500	8.5	23,600	1,250	7996259
	CSCF4860N6D*+TXV	G*E80805C*B*	40,500	30,800	14.5	12.0	39,000	30,000	39,500	8.5	23,600	1,325	7996260
	CSCF4860N6D*+TXV	G*E80805D*A*	40,500	30,800	14.5	12.0	39,000	30,000	39,500	8.5	23,600	1,280	7996261
	CSCF4860N6D*+TXV	G*E81005C*B*	40,500	30,800	14.5	12.0	39,000	30,000	39,000	8.5	23,600	1,225	7996262
	CSCF4860N6D*+TXV	G*EC961004CNA*	40,500	30,800	14.5	12.0	39,000	30,000	39,000	8.5	23,600	1,230	7996263
	CSCF4860N6D*+TXV	G*EC961205DNA*	40,000	30,400	14.5	12.0	38,500	29,600	40,000	8.5	23,600	1,300	7996264
	CSCF4860N6D*+TXV	G*VC80805C*B*	40,000	30,400	15.0	12.0	38,500	29,600	39,500	8.5	23,600	1,240	7996265
	CSCF4860N6D*+TXV	G*VC81005C*B*	40,000	30,400	15.0	12.0	38,500	29,600	39,500	8.5	23,600	1,250	7996266
	CSCF4860N6D*+TXV	G*VC960804CNA*	40,000	30,400	15.0	12.0	38,500	29,600	39,500	8.5	23,600	1,310	7996267
	CSCF4860N6D*+TXV	G*VC961005CNA*	40,000	30,400	15.0	12.0	38,500	29,600	39,500	8.5	23,600	1,300	7996268
	CSCF4860N6D*+TXV	G*VC961205DNA*	40,000	30,400	15.0	12.0	38,500	29,600	39,500	8.5	23,600	1,250	7996269
	CSCF4860N6D*+TXV	A*EH800805D*A*	40,500	30,800	14.5	12.0	39,000	30,000	39,500	8.5	23,600	1,280	7999229
VSZ14 0481A*	ARUF49D14A*+TXV		44,000	34,800	14.0	11.5	42,500	34,000	44,000	8.5	27,600	1,450	9119184
	ARUF61D14A*+TXV		45,000	35,600	14.0	11.5	43,500	34,800	44,500	8.5	28,000	1,555	7996289
	ASPT49D14A*		44,500	35,200	14.5	12.0	43,000	34,400	44,000	8.5	27,600	1,430	8242673
	ASPT59C14A*		45,000	35,600	14.0	12.0	43,500	34,800	44,500	8.2	27,600	1,430	8242675
	ASPT61D14A*		45,000	35,600	14.5	12.0	43,500	34,800	44,500	8.5	27,600	1,555	8242677
	AVPTC48D14A*		45,000	35,600	14.5	12.0	43,500	34,800	44,500	9.0	27,600	1,550	7996291
	AVPTC59C14A*		45,000	35,600	14.0	12.0	43,500	34,800	44,500	8.5	27,600	1,485	9119185
	AVPTC59D14A*		45,000	35,600	14.5	12.2	43,500	34,800	44,500	8.2	27,400	1,580	9119186
	AVPTC61D14A*		45,500	36,000	15.0	12.5	44,000	35,000	44,500	9.0	27,200	1,455	9119187
	CA*F4961*6D*	A*EC961205DNA*	45,500	36,000	14.0	11.5	44,000	35,000	44,500	9.0	27,600	1,520	7996302
	CA*F4961*6D*	A*VC961205DNA*	45,500	36,000	14.0	11.5	44,000	35,000	44,500	9.0	27,600	1,530	7996303
	CA*F4961*6D*	G*E80805D*A*	45,500	36,000	14.0	11.5	44,000	35,000	44,500	9.0	27,600	1,500	7996304

See Notes on Page 40.

Outdoor Unit	Indoor Units		Cooling Ratings ^				TVA Ratings [3]		Heating Ratings ^			CFM	AHRI #
	Coils/Air Handlers	Furnaces	Total	Sens.	SEER [1]	EER [2]	Total	Sens.	Hi [4]	HSPF [5]	Low [6]		
VSZ14 0481A* (Contd.)	CA*F4961*6D*	G*EC961205DNA*	45,500	36,000	14.0	11.5	44,000	35,000	44,500	9.0	27,600	1,520	7996305
	CA*F4961*6D*	G*VC961205DNA*	45,500	36,000	14.0	11.5	44,000	35,000	44,500	9.0	27,600	1,530	7996306
	CA*F4961*6D*	A*EH800805D*A*	45,500	36,000	14.0	11.5	44,000	35,000	44,500	9.0	27,600	1,500	7999234
	CA*F4961*6D*+EEP+TXV		45,000	35,600	14.0	11.5	43,500	34,800	45,000	9.0	27,600	1,555	7996292
	CA*F4961*6D*+MBVC1600**-1A*		45,500	36,000	14.5	12.0	44,000	35,000	44,500	9.0	27,600	1,500	7996293
	CA*F4961*6D*+MBVC1600**-1A*+TXV		45,500	36,000	15.0	12.5	44,000	35,000	44,500	9.0	27,600	1,500	7996294
	CA*F4961*6D*+MBVC2000**-1A*		46,000	36,400	14.5	12.0	44,500	35,400	44,500	9.0	27,600	1,570	7996295
	CA*F4961*6D*+MBVC2000**-1A*+TXV		46,000	36,400	15.0	12.5	44,500	35,400	44,500	9.0	27,600	1,570	7996296
	CA*F4961*6D*+TXV	A*EC961205DNA*	45,500	36,000	14.5	12.0	44,000	35,000	44,500	9.0	27,600	1,520	7996297
	CA*F4961*6D*+TXV	A*VC961205DNA*	45,500	36,000	14.5	12.0	44,000	35,000	44,500	9.0	27,600	1,530	7996298
	CA*F4961*6D*+TXV	G*E80805D*A*	45,500	36,000	14.5	12.0	44,000	35,000	44,500	9.0	27,600	1,500	7996299
	CA*F4961*6D*+TXV	G*EC961205DNA*	45,500	36,000	14.5	12.0	44,000	35,000	44,500	9.0	27,600	1,520	7996300
	CA*F4961*6D*+TXV	G*VC961205DNA*	45,500	36,000	14.5	12.0	44,000	35,000	44,500	9.0	27,600	1,530	7996301
	CA*F4961*6D*+TXV	A*EH800805D*A*	45,500	36,000	14.5	12.0	44,000	35,000	44,500	9.0	27,600	1,500	7999232
	CHPF4860D6D*	A*EC961205DNA*	45,000	35,600	14.0	11.5	43,500	34,800	44,500	9.0	27,600	1,520	7996317
	CHPF4860D6D*	A*VC961205DNA*	45,000	35,600	14.0	11.5	43,500	34,800	44,500	9.0	27,600	1,530	7996318
	CHPF4860D6D*	G*E80805D*A*	45,000	35,600	14.0	11.5	43,500	34,800	44,000	9.0	27,600	1,500	7996319
	CHPF4860D6D*	G*EC961205DNA*	45,000	35,600	14.0	11.5	43,500	34,800	44,500	9.0	27,600	1,520	7996320
	CHPF4860D6D*	G*VC961205DNA*	45,000	35,600	14.0	11.5	43,500	34,800	44,500	9.0	27,600	1,530	7996321
	CHPF4860D6D*	A*EH800805D*A*	45,000	35,600	14.0	11.5	43,500	34,800	44,000	9.0	27,600	1,500	7999236
	CHPF4860D6D*+EEP+TXV		45,000	35,600	14.0	11.5	43,500	34,800	44,500	9.0	27,600	1,555	7996307
	CHPF4860D6D*+MBVC1600**-1A*		45,000	35,600	14.5	12.0	43,500	34,800	44,000	9.0	27,600	1,500	7996308
	CHPF4860D6D*+MBVC1600**-1A*+TXV		45,000	35,600	15.0	12.5	43,500	34,800	44,000	9.0	27,600	1,500	7996309
	CHPF4860D6D*+MBVC2000**-1A*		45,500	36,000	14.5	12.0	44,000	35,000	44,000	9.0	27,600	1,570	7996310
	CHPF4860D6D*+MBVC2000**-1A*+TXV		45,500	36,000	15.0	12.5	44,000	35,000	44,000	9.0	27,600	1,570	7996311
	CHPF4860D6D*+TXV	A*EC961205DNA*	45,000	35,600	14.5	12.0	43,500	34,800	44,500	9.0	27,600	1,520	7996312
	CHPF4860D6D*+TXV	A*VC961205DNA*	45,000	35,600	14.5	12.0	43,500	34,800	44,500	9.0	27,600	1,530	7996313
	CHPF4860D6D*+TXV	G*E80805D*A*	45,000	35,600	14.5	12.0	43,500	34,800	44,000	9.0	27,600	1,500	7996314
	CHPF4860D6D*+TXV	G*EC961205DNA*	45,000	35,600	14.5	12.0	43,500	34,800	44,500	9.0	27,600	1,520	7996315
	CHPF4860D6D*+TXV	G*VC961205DNA*	45,000	35,600	14.5	12.0	43,500	34,800	44,500	9.0	27,600	1,530	7996316
	CHPF4860D6D*+TXV	A*EH800805D*A*	45,000	35,600	14.5	12.0	43,500	34,800	44,000	9.0	27,600	1,500	7999235
	CSCF4860N6D*	A*EC961205DNA*	45,000	35,600	14.0	11.5	43,500	34,800	44,000	9.0	27,600	1,520	7996332
	CSCF4860N6D*	A*VC961205DNA*	45,000	35,600	14.0	11.5	43,500	34,800	44,000	9.0	27,600	1,530	7996333
	CSCF4860N6D*	G*E80805D*A*	45,000	35,600	14.0	11.5	43,500	34,800	44,000	9.0	27,600	1,500	7996334
	CSCF4860N6D*	G*EC961205DNA*	45,000	35,600	14.0	11.5	43,500	34,800	44,000	9.0	27,600	1,520	7996335
	CSCF4860N6D*	G*VC961205DNA*	45,000	35,600	14.0	11.5	43,500	34,800	44,000	9.0	27,600	1,530	7996336
	CSCF4860N6D*	A*EH800805D*A*	45,000	35,600	14.0	11.5	43,500	34,800	44,000	9.0	27,600	1,500	7999238
	CSCF4860N6D*+EEP+TXV		45,000	35,600	14.0	11.5	43,500	34,800	45,000	9.0	27,600	1,555	7996322
	CSCF4860N6D*+MBVC1600**-1A*		45,000	35,600	14.0	11.5	43,500	34,800	44,000	9.0	27,600	1,500	7996323
	CSCF4860N6D*+MBVC1600**-1A*+TXV		45,000	35,600	15.0	12.0	43,500	34,800	44,000	9.0	27,600	1,500	7996324
	CSCF4860N6D*+MBVC2000**-1A*		45,500	36,000	14.0	12.0	44,000	35,000	44,000	9.0	27,600	1,570	7996325
	CSCF4860N6D*+MBVC2000**-1A*+TXV		45,500	36,000	15.0	12.5	44,000	35,000	44,000	9.0	27,600	1,570	7996326
	CSCF4860N6D*+TXV	A*EC961205DNA*	45,000	35,600	14.5	12.0	43,500	34,800	44,000	9.0	27,600	1,520	7996327
	CSCF4860N6D*+TXV	A*VC961205DNA*	45,000	35,600	14.5	12.0	43,500	34,800	44,000	9.0	27,600	1,530	7996328
	CSCF4860N6D*+TXV	G*E80805D*A*	45,000	35,600	14.5	12.0	43,500	34,800	44,000	9.0	27,600	1,500	7996329
	CSCF4860N6D*+TXV	G*EC961205DNA*	45,000	35,600	14.5	12.0	43,500	34,800	44,000	9.0	27,600	1,520	7996330
	CSCF4860N6D*+TXV	G*VC961205DNA*	45,000	35,600	14.5	12.0	43,500	34,800	44,000	9.0	27,600	1,530	7996331
	CSCF4860N6D*+TXV	A*EH800805D*A*	45,000	35,600	14.5	12.0	43,500	34,800	44,000	9.0	27,600	1,500	7999237
VSZ14 0491A*	ARUF49C14A*+TXV		44,500	33,400	14.0	11.5	43,000	32,600	46,000	8.5	27,600	1,400	7996337
	ARUF61D14A*		44,500	33,400	14.0	12.0	43,000	32,600	47,000	8.5	28,000	1,450	7996338
	ASPT49D14A*		45,500	34,200	15.0	12.5	44,000	33,400	45,500	8.5	26,000	1,425	8242679

See Notes on Page 40.

Outdoor Unit	Indoor Units		Cooling Ratings ^				TVA Ratings [3]		Heating Ratings ^			CFM	AHRI #
	Coils/Air Handlers	Furnaces	Total	Sens.	SEER [1]	EER [2]	Total	Sens.	HI [4]	HSPF [5]	Low [6]		
VSZ14 0491A* (Contd.)	ASPT59C14A*		45,000	33,800	14.5	12.0	43,500	33,000	46,000	8.5	26,000	1,430	8242678
	ASPT61D14A*		46,000	34,600	15.0	12.5	44,500	33,800	46,000	8.5	26,000	1,630	8242682
	AVPTC48D14A*		45,000	33,800	14.5	12.0	43,500	33,000	47,000	8.5	28,000	1,540	7996339
	CA*F4961*6D*	A*EC961004CNA*	45,500	34,200	14.0	12.0	44,000	33,400	47,500	8.5	28,000	1,585	7996356
	CA*F4961*6D*	A*EH800805C*A*	45,500	34,200	14.0	12.0	44,000	33,400	47,000	8.5	28,000	1,515	7996357
	CA*F4961*6D*	G*VC80805D*B*	45,500	35,200	14.0	12.0	44,000	34,400	47,500	8.5	28,000	1,500	9924373
	CA*F4961*6D*	A*EH801005C*A*	45,500	34,200	14.0	12.0	44,000	33,400	47,500	8.5	28,000	1,575	7996358
	CA*F4961*6D*	A*VC960804CNA*	45,500	34,200	14.5	12.0	44,000	33,400	47,000	8.5	28,000	1,525	7996359
	CA*F4961*6D*	A*VC961205DNA*	45,500	34,200	14.0	12.0	44,000	33,400	47,500	8.5	28,000	1,525	7996360
	CA*F4961*6D*	G*E80805C*B*	45,500	34,200	14.0	12.0	44,000	33,400	47,000	8.5	28,000	1,515	7996361
	CA*F4961*6D*	G*E80805D*A*	45,500	34,200	14.5	12.0	44,000	33,400	47,000	8.5	28,000	1,480	7996362
	CA*F4961*6D*	G*E81005C*B*	45,500	34,200	14.0	12.0	44,000	33,400	47,500	8.5	28,000	1,575	7996363
	CA*F4961*6D*	G*EC961004CNA*	45,500	34,200	14.0	12.0	44,000	33,400	47,500	8.5	28,000	1,585	7996364
	CA*F4961*6D*	G*VC960804CNA*	45,500	34,200	14.5	12.0	44,000	33,400	47,000	8.5	28,000	1,525	7996365
	CA*F4961*6D*	G*VC961205DNA*	45,500	34,200	14.0	12.0	44,000	33,400	47,500	8.5	28,000	1,525	7996366
	CA*F4961*6D*	A*EC961205DNA*	45,500	34,200	14.5	12.0	44,000	33,400	47,000	8.5	28,000	1,475	7996489
	CA*F4961*6D*	A*VC80805C*B*	45,500	34,200	14.0	12.0	44,000	33,400	47,500	8.5	28,000	1,510	7996490
	CA*F4961*6D*	A*VC81005C*B*	45,500	34,200	14.0	12.0	44,000	33,400	47,500	8.5	28,000	1,520	7996491
	CA*F4961*6D*	A*VC961005CNA*	45,500	34,200	14.0	12.0	44,000	33,400	47,500	8.5	28,000	1,520	7996492
	CA*F4961*6D*	G*EC961205DNA*	45,500	34,200	14.5	12.0	44,000	33,400	47,000	8.5	28,000	1,475	7996493
	CA*F4961*6D*	G*VC80805C*B*	45,500	34,200	14.0	12.0	44,000	33,400	47,500	8.5	28,000	1,510	7996494
	CA*F4961*6D*	G*VC81005C*B*	45,500	34,200	14.0	12.0	44,000	33,400	47,500	8.5	28,000	1,520	7996495
	CA*F4961*6D*	G*VC961005CNA*	45,500	34,200	14.0	12.0	44,000	33,400	47,500	8.5	28,000	1,520	7996496
	CA*F4961*6D*	A*EH800805D*A*	45,500	34,200	14.5	12.0	44,000	33,400	47,000	8.5	28,000	1,480	7999240
	CA*F4961*6D*+EEP+TXV		45,000	33,800	14.0	11.5	43,500	33,000	47,500	8.5	28,600	1,600	7996340
	CA*F4961*6D*+MBVC1600**-1A*		45,500	34,200	14.5	12.0	44,000	33,400	47,000	8.5	28,000	1,500	7996341
	CA*F4961*6D*+MBVC1600**-1A*+TXV		45,500	34,200	15.0	12.2	44,000	33,400	47,000	8.5	28,000	1,500	7996342
	CA*F4961*6D*+MBVC2000**-1A*		45,500	34,200	14.5	12.2	44,000	33,400	47,000	9.0	28,000	1,570	7996343
	CA*F4961*6D*+MBVC2000**-1A*+TXV		45,500	34,200	15.0	12.5	44,000	33,400	47,000	9.0	28,000	1,570	7996344
	CA*F4961*6D*+TXV	G*VC80805D*B*	45,500	35,200	14.5	12.2	44,000	34,400	47,500	8.5	28,000	1,500	9924374
	CA*F4961*6D*+TXV	A*EC961004CNA*	45,500	34,200	14.5	12.2	44,000	33,400	47,500	8.5	28,000	1,585	7996345
	CA*F4961*6D*+TXV	A*EH800805C*A*	45,500	34,200	14.5	12.5	44,000	33,400	47,000	8.5	28,000	1,480	7996346
	CA*F4961*6D*+TXV	A*EH801005C*A*	45,500	34,200	14.5	12.2	44,000	33,400	47,500	8.5	28,000	1,575	7996347
	CA*F4961*6D*+TXV	A*VC960804CNA*	45,500	34,200	15.0	12.5	44,000	33,400	47,000	8.5	28,000	1,525	7996348
	CA*F4961*6D*+TXV	A*VC961205DNA*	45,500	34,200	14.5	12.2	44,000	33,400	47,500	8.5	28,000	1,525	7996349
	CA*F4961*6D*+TXV	G*E80805C*B*	45,500	34,200	14.5	12.5	44,000	33,400	47,000	8.5	28,000	1,480	7996350
	CA*F4961*6D*+TXV	G*E80805D*A*	45,500	34,200	15.0	12.5	44,000	33,400	47,000	8.5	28,000	1,480	7996351
	CA*F4961*6D*+TXV	G*E81005C*B*	45,500	34,200	14.5	12.2	44,000	33,400	47,500	8.5	28,000	1,575	7996352
	CA*F4961*6D*+TXV	G*EC961004CNA*	45,500	34,200	14.5	12.2	44,000	33,400	47,500	8.5	28,000	1,585	7996353
	CA*F4961*6D*+TXV	G*VC960804CNA*	45,500	34,200	15.0	12.5	44,000	33,400	47,000	8.5	28,000	1,525	7996354
	CA*F4961*6D*+TXV	G*VC961205DNA*	45,500	34,200	14.5	12.2	44,000	33,400	47,500	8.5	28,000	1,525	7996355
	CA*F4961*6D*+TXV	A*EC961205DNA*	45,500	34,200	15.0	12.5	44,000	33,400	47,000	8.5	28,000	1,475	7996481
	CA*F4961*6D*+TXV	A*VC80805C*B*	45,500	34,200	14.5	12.2	44,000	33,400	47,500	8.5	28,000	1,510	7996482
	CA*F4961*6D*+TXV	A*VC81005C*B*	45,500	34,200	14.5	12.2	44,000	33,400	47,500	8.5	28,000	1,520	7996483
	CA*F4961*6D*+TXV	A*VC961005CNA*	45,500	34,200	14.5	12.0	44,000	33,400	47,500	8.5	28,000	1,520	7996484
	CA*F4961*6D*+TXV	G*EC961205DNA*	45,500	34,200	15.0	12.5	44,000	33,400	47,000	8.5	28,000	1,475	7996485
	CA*F4961*6D*+TXV	G*VC80805C*B*	45,500	34,200	14.5	12.2	44,000	33,400	47,500	8.5	28,000	1,510	7996486
	CA*F4961*6D*+TXV	G*VC81005C*B*	45,500	34,200	14.5	12.2	44,000	33,400	47,500	8.5	28,000	1,520	7996487
	CA*F4961*6D*+TXV	G*VC961005CNA*	45,500	34,200	14.5	12.0	44,000	33,400	47,500	8.5	28,000	1,520	7996488
	CA*F4961*6D*+TXV	A*EH800805D*A*	45,500	34,200	15.0	12.5	44,000	33,400	47,000	8.5	28,000	1,480	7999239
	CHPF4860D6D*	A*EC961205DNA*	45,000	33,800	14.0	11.5	43,500	33,000	47,000	8.5	28,000	1,520	7996377

See Notes on Page 40.

Outdoor Unit	Indoor Units		Cooling Ratings ^				TVA Ratings [3]		Heating Ratings ^			CFM	AHRI #
	Coils/Air Handlers	Furnaces	Total	Sens.	SEER [1]	EER [2]	Total	Sens.	Hi [4]	HSPF [5]	Low [6]		
VSZ14 0491A* (Contd.)	CHPF4860D6D*	A*VC961205DNA*	45,500	34,200	14.0	12.0	44,000	33,400	47,000	8.5	28,000	1,525	7996378
	CHPF4860D6D*	G*E80805D*A*	45,000	33,800	14.0	11.5	43,500	33,000	47,000	8.5	28,000	1,490	7996379
	CHPF4860D6D*	G*EC961205DNA*	45,000	33,800	14.0	11.5	43,500	33,000	47,000	8.5	28,000	1,520	7996380
	CHPF4860D6D*	G*VC961205DNA*	45,500	34,200	14.0	12.0	44,000	33,400	47,000	8.5	28,000	1,525	7996381
	CHPF4860D6D*	A*EH800805D*A*	45,000	33,800	14.0	11.5	43,500	33,000	47,000	8.5	28,000	1,490	7999242
	CHPF4860D6D*+EEP+TXV		45,000	33,800	14.0	11.5	43,500	33,000	47,000	8.5	28,600	1,600	7996367
	CHPF4860D6D*+MBVC1600**-1A*		45,500	34,200	14.5	11.5	44,000	33,400	47,000	8.5	28,000	1,500	7996368
	CHPF4860D6D*+MBVC1600**-1A*+TXV		45,500	34,200	15.0	12.0	44,000	33,400	47,000	8.5	28,000	1,500	7996369
	CHPF4860D6D*+MBVC2000**-1A*		45,500	34,200	14.5	12.0	44,000	33,400	47,000	9.0	28,000	1,570	7996370
	CHPF4860D6D*+MBVC2000**-1A*+TXV		45,500	34,200	15.0	12.5	44,000	33,400	47,000	9.0	28,000	1,570	7996371
	CHPF4860D6D*+TXV	A*EC961205DNA*	45,000	33,800	14.5	12.0	43,500	33,000	47,000	8.5	28,000	1,520	7996372
	CHPF4860D6D*+TXV	A*VC961205DNA*	45,500	34,200	14.5	12.2	44,000	33,400	47,000	8.5	28,000	1,525	7996373
	CHPF4860D6D*+TXV	G*E80805D*A*	45,000	33,800	14.5	12.0	43,500	33,000	47,000	8.5	28,000	1,490	7996374
	CHPF4860D6D*+TXV	G*EC961205DNA*	45,000	33,800	14.5	12.0	43,500	33,000	47,000	8.5	28,000	1,520	7996375
	CHPF4860D6D*+TXV	G*VC961205DNA*	45,500	34,200	14.5	12.2	44,000	33,400	47,000	8.5	28,000	1,525	7996376
	CHPF4860D6D*+TXV	A*EH800805D*A*	45,000	33,800	14.5	12.0	43,500	33,000	47,000	8.5	28,000	1,490	7999241
	CSCF4860N6D*	G*VC80805D*B*	45,500	35,200	14.0	11.5	44,000	34,400	47,500	8.5	28,000	1,500	9924375
	CSCF4860N6D*	A*EC961004CNA*	45,500	34,200	14.0	11.5	44,000	33,400	47,500	8.5	28,000	1,585	7996406
	CSCF4860N6D*	A*EC961205DNA*	45,000	33,800	14.0	11.5	43,500	33,000	47,000	8.5	28,000	1,520	7996407
	CSCF4860N6D*	A*EH800805C*A*	45,000	33,800	14.0	11.5	43,500	33,000	47,000	8.5	28,000	1,480	7996408
	CSCF4860N6D*	A*EH801005C*A*	45,500	34,200	14.0	11.5	44,000	33,400	47,500	8.5	28,000	1,575	7996409
	CSCF4860N6D*	A*VC80805C*B*	45,500	34,200	14.0	11.5	44,000	33,400	47,500	8.5	28,000	1,590	7996410
	CSCF4860N6D*	A*VC81005C*B*	45,500	34,200	14.0	11.5	44,000	33,400	47,500	8.5	28,000	1,610	7996411
	CSCF4860N6D*	A*VC960804CNA*	45,000	33,800	14.0	11.5	43,500	33,000	47,000	8.5	28,000	1,525	7996412
	CSCF4860N6D*	A*VC961005CNA*	45,500	34,200	14.0	11.5	44,000	33,400	47,500	8.5	28,000	1,610	7996413
	CSCF4860N6D*	A*VC961205DNA*	45,500	34,200	14.0	12.0	44,000	33,400	47,500	8.5	28,000	1,525	7996414
	CSCF4860N6D*	G*E80805C*B*	45,000	33,800	14.0	11.5	43,500	33,000	47,000	8.5	28,000	1,480	7996415
	CSCF4860N6D*	G*E80805D*A*	45,000	33,800	14.0	11.5	43,500	33,000	47,000	8.5	28,000	1,490	7996416
	CSCF4860N6D*	G*E81005C*B*	45,500	34,200	14.0	11.5	44,000	33,400	47,500	8.5	28,000	1,575	7996417
	CSCF4860N6D*	G*EC961004CNA*	45,500	34,200	14.0	11.5	44,000	33,400	47,500	8.5	28,000	1,585	7996418
	CSCF4860N6D*	G*EC961205DNA*	45,000	33,800	14.0	11.5	43,500	33,000	47,000	8.5	28,000	1,520	7996419
	CSCF4860N6D*	G*VC80805C*B*	45,500	34,200	14.0	11.5	44,000	33,400	47,500	8.5	28,000	1,590	7996420
	CSCF4860N6D*	G*VC81005C*B*	45,500	34,200	14.0	11.5	44,000	33,400	47,500	8.5	28,000	1,610	7996421
	CSCF4860N6D*	G*VC960804CNA*	45,000	33,800	14.0	11.5	43,500	33,000	47,000	8.5	28,000	1,525	7996422
	CSCF4860N6D*	G*VC961005CNA*	45,500	34,200	14.0	11.5	44,000	33,400	47,500	8.5	28,000	1,610	7996423
	CSCF4860N6D*	G*VC961205DNA*	45,500	34,200	14.0	12.0	44,000	33,400	47,500	8.5	28,000	1,525	7996424
	CSCF4860N6D*	A*EH800805D*A*	45,000	33,800	14.0	11.5	43,500	33,000	47,000	8.5	28,000	1,490	7999244
	CSCF4860N6D*+EEP+TXV		45,000	33,800	14.0	11.5	43,500	33,000	47,500	8.5	28,600	1,600	7996382
	CSCF4860N6D*+MBVC1600**-1A*		45,000	33,800	14.5	11.5	43,500	33,000	47,000	8.5	28,000	1,500	7996383
	CSCF4860N6D*+MBVC1600**-1A*+TXV		45,000	33,800	15.0	12.0	43,500	33,000	47,000	8.5	28,000	1,500	7996384
	CSCF4860N6D*+MBVC2000**-1A*		45,500	34,200	14.5	12.0	44,000	33,400	47,000	9.0	28,000	1,570	7996385
	CSCF4860N6D*+MBVC2000**-1A*+TXV		45,500	34,200	15.0	12.5	44,000	33,400	47,000	9.0	28,000	1,570	7996386
	CSCF4860N6D*+TXV	G*VC80805D*B*	45,500	35,200	14.5	12.0	44,000	34,400	47,500	8.5	28,000	1,500	9924376
	CSCF4860N6D*+TXV	A*EC961004CNA*	45,500	34,200	14.5	12.0	44,000	33,400	47,500	8.5	28,000	1,585	7996387
	CSCF4860N6D*+TXV	A*EC961205DNA*	45,000	33,800	14.5	12.0	43,500	33,000	47,000	8.5	28,000	1,520	7996388
	CSCF4860N6D*+TXV	A*EH800805C*A*	45,000	33,800	14.5	12.0	43,500	33,000	47,000	8.5	28,000	1,480	7996389
	CSCF4860N6D*+TXV	A*EH801005C*A*	45,500	34,200	14.5	12.0	44,000	33,400	47,500	8.5	28,000	1,575	7996390
	CSCF4860N6D*+TXV	A*VC80805C*B*	45,500	34,200	14.5	12.0	44,000	33,400	47,500	8.5	28,000	1,590	7996391
	CSCF4860N6D*+TXV	A*VC81005C*B*	45,500	34,200	14.5	12.0	44,000	33,400	47,500	8.5	28,000	1,610	7996392
	CSCF4860N6D*+TXV	A*VC960804CNA*	45,000	33,800	14.5	12.0	43,500	33,000	47,000	8.5	28,000	1,525	7996393
	CSCF4860N6D*+TXV	A*VC961005CNA*	45,500	34,200	14.5	12.0	44,000	33,400	47,500	8.5	28,000	1,610	7996394

See Notes on Page 40.

Outdoor Unit	Indoor Units		Cooling Ratings ^				TVA Ratings [3]		Heating Ratings ^			CFM	AHRI #
	Coils/Air Handlers	Furnaces	Total	Sens.	SEER [1]	EER [2]	Total	Sens.	HI [4]	HSPF [5]	Low [6]		
VSZ14 0491A* (Contd.)	CSCF4860N6D*+TXV	A*VC961205DNA*	45,500	34,200	14.5	12.2	44,000	33,400	47,500	8.5	28,000	1,525	7996395
	CSCF4860N6D*+TXV	G*E80805C*B*	45,000	33,800	14.5	12.0	43,500	33,000	47,000	8.5	28,000	1,480	7996396
	CSCF4860N6D*+TXV	G*E80805D*A*	45,000	33,800	14.5	12.0	43,500	33,000	47,000	8.5	28,000	1,490	7996397
	CSCF4860N6D*+TXV	G*E81005C*B*	45,500	34,200	14.5	12.0	44,000	33,400	47,500	8.5	28,000	1,575	7996398
	CSCF4860N6D*+TXV	G*EC961004CNA*	45,500	34,200	14.5	12.0	44,000	33,400	47,500	8.5	28,000	1,585	7996399
	CSCF4860N6D*+TXV	G*EC961205DNA*	45,000	33,800	14.5	12.0	43,500	33,000	47,000	8.5	28,000	1,520	7996400
	CSCF4860N6D*+TXV	G*VC80805C*B*	45,500	34,200	14.5	12.0	44,000	33,400	47,500	8.5	28,000	1,590	7996401
	CSCF4860N6D*+TXV	G*VC81005C*B*	45,500	34,200	14.5	12.0	44,000	33,400	47,500	8.5	28,000	1,610	7996402
	CSCF4860N6D*+TXV	G*VC960804CNA*	45,000	33,800	14.5	12.0	43,500	33,000	47,000	8.5	28,000	1,525	7996403
	CSCF4860N6D*+TXV	G*VC961005CNA*	45,500	34,200	14.5	12.0	44,000	33,400	47,500	8.5	28,000	1,610	7996404
	CSCF4860N6D*+TXV	G*VC961205DNA*	45,500	34,200	14.5	12.2	44,000	33,400	47,500	8.5	28,000	1,525	7996405
	CSCF4860N6D*+TXV	A*EH800805D*A*	45,000	33,800	14.5	12.0	43,500	33,000	47,000	8.5	28,000	1,490	7999243
VSZ14 0601A*	ASPT61D14A*		56,500	43,000	14.0	11.5	54,500	42,000	59,000	8.5	36,000	1,800	7996425
	AVPTC60D14A*		56,000	42,500	14.0	11.5	54,000	41,500	59,000	8.5	36,000	1,745	7996426
	AVPTC61D14A*		56,000	42,500	14.0	11.5	54,000	41,500	59,000	8.5	36,000	1,775	9119188
	CA*F4961*6D*+EEP+TXV		55,500	42,000	14.0	11.5	53,500	41,000	59,000	8.5	36,600	1,600	7996427
	CA*F4961*6D*+MBVC2000**-1A*		57,000	43,500	14.0	11.5	55,000	42,500	59,000	9.0	36,600	1,770	7996428
	CA*F4961*6D*+MBVC2000**-1A*+TXV		57,000	43,500	14.5	12.0	55,000	42,500	59,000	9.0	36,600	1,770	7996429
	CA*F4961*6D*+TXV	A*EC961205DNA*	56,000	42,500	14.0	11.5	54,000	41,500	58,000	8.5	36,000	1,600	7996430
	CA*F4961*6D*+TXV	A*VC961205DNA*	56,000	42,500	14.0	11.5	54,000	41,500	58,000	8.5	36,000	1,600	7996431
	CA*F4961*6D*+TXV	G*E80805D*A*	56,000	42,500	14.0	11.5	54,000	41,500	59,000	8.5	36,600	1,700	7996432
	CA*F4961*6D*+TXV	G*EC961205DNA*	56,000	42,500	14.0	11.5	54,000	41,500	58,000	8.5	36,000	1,600	7996433
	CA*F4961*6D*+TXV	G*VC961205DNA*	56,000	42,500	14.0	11.5	54,000	41,500	58,000	8.5	36,000	1,600	7996434
	CA*F4961*6D*+TXV	A*EH800805D*A*	56,000	42,500	14.0	11.5	54,000	41,500	59,000	8.5	36,600	1,700	7999245
	CHPF4860D6D*+EEP+TXV		55,000	42,000	14.0	11.5	53,000	41,000	57,000	8.5	36,600	1,600	7996435
	CHPF4860D6D*+MBVC2000**-1A*		57,000	43,500	14.0	11.5	55,000	42,500	59,000	9.0	36,000	1,770	7996436
	CHPF4860D6D*+MBVC2000**-1A*+TXV		57,000	43,500	14.5	12.0	55,000	42,500	59,000	9.0	36,000	1,770	7996437
	CHPF4860D6D*+TXV	A*EC961205DNA*	56,000	42,500	14.0	11.5	54,000	41,500	59,000	8.5	36,000	1,600	7996438
	CHPF4860D6D*+TXV	A*VC961205DNA*	56,000	42,500	14.0	11.5	54,000	41,500	58,000	8.5	36,600	1,600	7996439
	CHPF4860D6D*+TXV	G*E80805D*A*	56,000	42,500	14.0	11.5	54,000	41,500	59,000	8.5	37,000	1,700	7996440
	CHPF4860D6D*+TXV	G*EC961205DNA*	56,000	42,500	14.0	11.5	54,000	41,500	59,000	8.5	36,000	1,600	7996441
	CHPF4860D6D*+TXV	G*VC961205DNA*	56,000	42,500	14.0	11.5	54,000	41,500	58,000	8.5	36,600	1,600	7996442
	CHPF4860D6D*+TXV	A*EH800805D*A*	56,000	42,500	14.0	11.5	54,000	41,500	59,000	8.5	37,000	1,700	7999246
	CSCF4860N6D*+MBVC2000**-1A*		57,000	43,500	14.0	11.5	55,000	42,500	59,000	9.0	36,000	1,770	7996443
	CSCF4860N6D*+MBVC2000**-1A*+TXV		57,000	43,500	14.0	12.0	55,000	42,500	59,000	9.0	36,000	1,770	7996444
	CSCF4860N6D*+TXV	A*EC961205DNA*	56,000	42,500	14.0	11.5	54,000	41,500	59,000	8.5	36,000	1,600	7996445
	CSCF4860N6D*+TXV	A*VC961205DNA*	56,000	42,500	14.0	11.5	54,000	41,500	58,000	8.5	36,000	1,600	7996446
	CSCF4860N6D*+TXV	G*E80805D*A*	56,000	42,500	14.0	11.5	54,000	41,500	59,000	8.5	36,000	1,700	7996447
	CSCF4860N6D*+TXV	G*EC961205DNA*	56,000	42,500	14.0	11.5	54,000	41,500	59,000	8.5	36,000	1,600	7996448
	CSCF4860N6D*+TXV	G*VC961205DNA*	56,000	42,500	14.0	11.5	54,000	41,500	58,000	8.5	36,000	1,600	7996449
	CSCF4860N6D*+TXV	A*EH800805D*A*	56,000	42,500	14.0	11.5	54,000	41,500	59,000	8.5	36,000	1,700	7999247

^ Rated in accordance with ANSI/AHRI Standard 210/240

[1] Seasonal Energy Efficiency Ratio

[2] Energy Efficiency Ratio @ 80°F/ 67°F/ 95°F

[3] TVA Rating: BTU/h @ 75°F/ 63°F - 95°F

[4] Rated heating capacity at 47°F outdoor per AHRI 210/240

[5] HSPF = Heating Seasonal Performance Factor

[6] Heating capacity at 17°F outdoor

[7] CFM at High stage

[8] CFM at Intermediate and low stage

Notes

- Always check the S&R plate for electrical data on the unit being installed.
- When matching outdoor unit to indoor unit, use the piston supplied with the outdoor unit or that specified on the piston kit chart supplied with the indoor unit.
- EEP - Order from Service Dept. Part No. B13707-38 or new Solid State Board B13707-35S. Part No. B13707-38 is not interchangeable with B13707-35S. The Goodman brand gas furnace contains the EEP cooling time delay.

ECN	REV	ZONE	DESCRIPTION	CHK	D	DATE
XXXXXXX	A	XXXXX		–	GL	

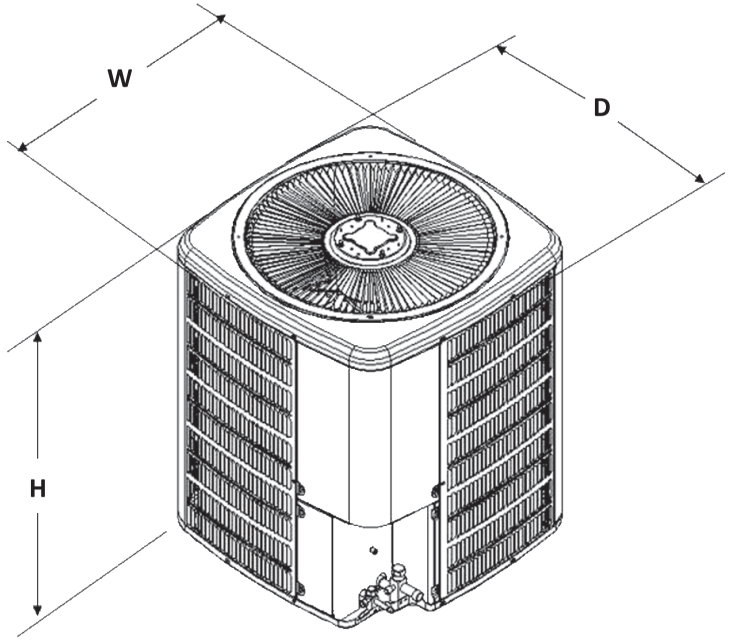

Model	Dimensions		
	W”	D”	H”
VSZ140181A*	29	29	34½
VSZ140241A*	29	29	34½
VSZ140301A*	29	29	36¼
VSZ140361A*	29	29	36¼
VSZ140421A*	35½	35½	39¾
VSZ140481A*	29	29	36¼
VSZ140491A*	35½	35½	34½
VSZ140601A*	35½	35½	34½

SPECIAL CHARACTERISTICS:

6S = 6SIGMA CC = CRITICAL CHARACTERISTIC SC = SIGNIFICANT CHARACTERISTIC

COMPONENTS AND MATERIALS SPECIFIED HEREIN WILL ALSO CONFORM TO THE APPLICABLE SECTION OF GOODMAN MSP 824.01 WORKMANSHIP STANDARD FOR FIT, FEEL AND FINISH.

CONFIDENTIAL PROPERTY OF THE GOODMAN MANUFACTURING COMPANY, L.P. NOT TO BE DISCLOSED TO OTHERS, COPIED, OR USED FOR ANY PURPOSE EXCEPT AS AUTHORIZED IN WRITING. MUST BE RETURNED UPON DEMAND, ON COMPLETION OF ORDER, OR OTHER PURPOSE FOR WHICH IT WAS LENT.

Goodman Manufacturing Co., LP

DRAWING TO BE INTERPRETED IN ACCORDANCE WITH ASME Y14.100

DIMENSIONS ARE IN INCHES UNLESS OTHERWISE NOTED

TOLERANCES: ANGLES ± 1.5° .X: ± .1 .XX: ± .03 XXX: ± .015 HOLE Ø: ± .005 TUBE CUT LG: ± .063

VSZ14

DWN BY: | ENG: | DO NOT SCALE DRAWING | SHT 1 OF 1 | REV A

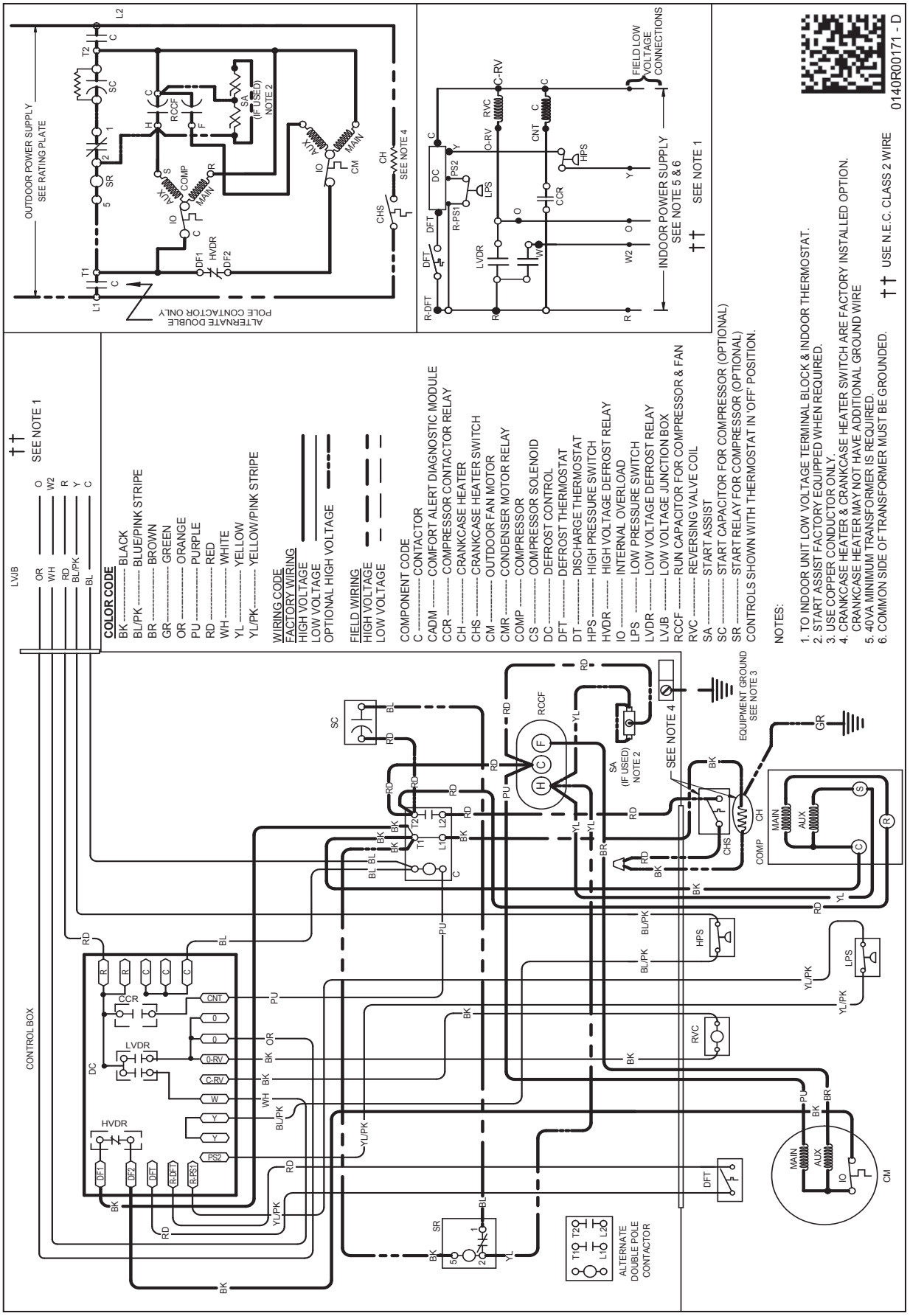

WARNING — ***High Voltage:*** Disconnect all power before servicing or installing this unit. Multiple power sources may be present. Failure to do so may cause property damage, personal injury, or death.

Wiring is subject to change. Always refer to the wiring diagram or the unit for the most up-to-date wiring.

MODEL #	DESCRIPTION	VSZ14 018	VSZ14 024	VSZ14 030	VSZ14 036	VSZ14 042	VSZ14 048/049	VSZ14 060
0130R00000S	Low-pressure Switch Kit	X	X	X	X	X	X	X
ABK-20	Anchor Bracket Kit ◊	X	X	X	X	X	X	X
ASC-01	Anti-Short Cycle Kit	X	X	X	X	X	X	X
AFE18-60A	All-fuel Kit	X	X	X	X	X	X	X
CSR-U-1	Hard-start Kit	X	X	X	X	X	X	X
FSK01A[1]	Freeze Protection Kit	X	X	X	X	X	X	X
OT18-60A[2]	Outdoor Thermostat	X	X	X	X	X	X	X
OT/EHR18-60	Emergency Heat Relay kit	X	X	X	X	X	X	X
TX2N4A [3]	TXV Kit	X	X					
TX3N4 [3]	TXV Kit			X	X			
TX5N4 [3]	TXV Kit					X	X	X

◊ Contains 20 brackets; four brackets needed to anchor unit to pad

1 Installed on indoor coil

2 Required for heat pump applications where ambient temperatures fall below 0°F with 50% or higher relative humidity.

3 Condensing units and heat pumps with reciprocating compressors require the use of start-assist components when used in conjunction with an indoor coil using a non-bleed thermal expansion valve refrigerant metering device or liquid line solenoid kit. The TXV should always be sized based on the tonnage of the outdoor unit.

Goodman Manufacturing Company, L.P., reserves the right to discontinue, or change at any time, specifications or designs without notice or without incurring obligations. ©2018 Goodman Manufacturing Company, L.P. • Houston, Texas • Printed in the USA.